developing solutions

ELECTROPROJECT

FISCHER MESS- UND REGELTECHNIK

IEC 61508
SIL
ISO 13849
PL

II 3G Ex ec IIC T4 Gc
II 3D Ex tc IIIB T125°C Dc

IO-Link Modbus

Data sheet

DE90

Differential pressure transmitter
PRO-LINE ®

09015202 • DB_EN_DE90 • Rev. ST4-R • 11/24

1 Product and functional description

1.1 Performance characteristics

Typical applications

- Space and clean room monitoring
- Supply and exhaust air systems, TNV systems
- Dynamic filter monitoring
- Filter monitoring
- Volume flow measurement
- Surface coating systems
- Process monitoring

Main features

- Robust, resistant to overpressure and maintenance-free
- Simple configuration
- Measuring ranges from
  - 25 Pa to 25 kPa
  - 1 mbar to 250 mbar
- Measuring accuracy up to 0.5%
- Turn down ratio of 4:1
- Optionally one or two-channel model with 2 or 4 configurable switch outputs
- Optional analogue output signal for each channel
  - 0/4 to 20 mA, 0/2 to 10 V, or 1 to 5 V
  - Characteristic curve conversion and adjustment to process
- Multi-line LC display
  - Fully graphic with colour backlighting for the visualisation of the operating modes
  - Multilingual plain text menu
- Digital interfaces
  - USB OTG
  - RS485 Modbus RTU
  - IO-Link

1.2 Intended use

The DE90 is a differential pressure transmitter with additional switch outputs. It is suitable for measuring overpressure, under-pressure and differential pressure in neutral gaseous media.

The device may only be used for the purpose stipulated by the manufacturer. The manufacturer will not be liable for damage arising from incorrect or improper use.

1.2.1 Use in safety-related systems (SIL, PL)

⚠ WARNING

Exceptions

Devices with a Modbus or IO-Link interface must not be used in safety-related systems.

IEC 61508 SIL
ISO 13849 PL

All other models may be used in safety-related systems.

For use in safety-related systems in accordance with “Functional Safety” (SIL) or “Functional Safety for Machines” (PL), the correct functioning of the safety function must be verified. You will find the necessary key figures, safety instructions, installation and maintenance instructions in the Safety Manual.

The Safety Manual is available for download via the following link:

https://www.fischermesstechnik.de/de/produkte/details/de90

1.2.2 Explosion hazard area classification

Eurasian Economic Union (EAC):

The device does not have ATEX approval for this market. It may only be used there as an industrial device.

1.2.2.1 Gas explosion protection

Zone 2

Devices with the order code **DE90** ## ## ## # 0 # 000 **R1** # # are suitable as 'Electrical equipment for use in potentially explosive areas', Zone 2 - Gases and vapours.

Designation as per Directive 2014/34/EU:

Ex II 3G Ex ec IIC T4 Gc

1.2.2.2 Dust explosion protection

Zone 22

Devices with the order code **DE90** ## ## ## # 0 # 000 **R1** # # are suitable as “Electrical equipment for use in areas with combustible dust”, Zone 22 - dry dusts.

Designation as per Directive 2014/34/EU:

Ex II 3D Ex tc IIIB T125°C Dc

-20°C ≤ T_{amb} ≤ 60°C

1.2.3 External application

If the device is intended for outdoor use, we recommend permanently protecting the membrane keypad against UV radiation and using a suitable enclosure or at least the erection of a sufficiently dimensioned canopy as a protection measure against constant rain or snow.

1.3 Function diagram

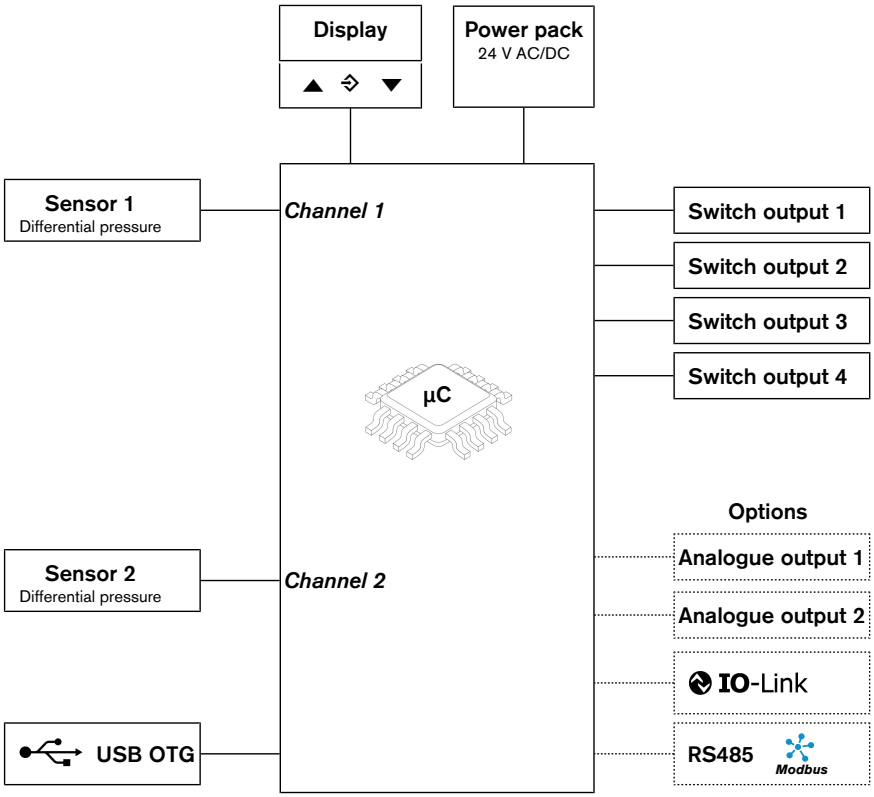

Fig. 1: Function diagram

1.4 Design and mode of operation

The device is based on a piezoresistive sensor element that is suitable for measuring overpressure, under-pressure and differential pressure. The pressures to be compared have a direct effect on a silicon membrane equipped with a measuring bridge.

When the pressure is equal, the measuring membrane is in its idle state. If a pressure difference occurs, the membrane is deflected and a resistance change takes place on the attached measuring bridge. This change is evaluated by the device's electronics and transformed into the display and up to four switch contacts.

Options:

The device can be equipped with up to two analogue outputs. The optional output signal can be dampened, spread, inverted and transformed via a table function even if it is nonlinear.

The device can be equipped either with a Modbus RTU interface or, alternatively, with an IO-Link interface.

1.4.1 Equipment

Overall, the device can be delivered with the following equipment.

	1 channel	2 channels	Modbus RTU*)		IO-Link
			(Opt1)	(Opt2)	
Switch output 1	x	x		x	x
Switch output 2	x	x		x	x
Switch output 3		x		x	x
Switch output 4		x		x	x
USB interface	x	x	x	x	x
Options:					
RS485 Modbus RTU			x	x	
IO-Link					x
Analogue output 1	x	x			
Analogue output 2		x			

*) Opt1: without switch outputs; Opt2: with switch outputs

1.4.2 Modbus RTU

For operating a device with a Modbus RTU interface, the corresponding Modbus manual is available for download from the FISCHER website.

1.4.3 IO-Link

For operating a device with an IO-Link interface, the IODD file and the corresponding interface description are available for download from the FISCHER website.

1.5 Equipment versions

Process connections

The connections presented here are used for all models.

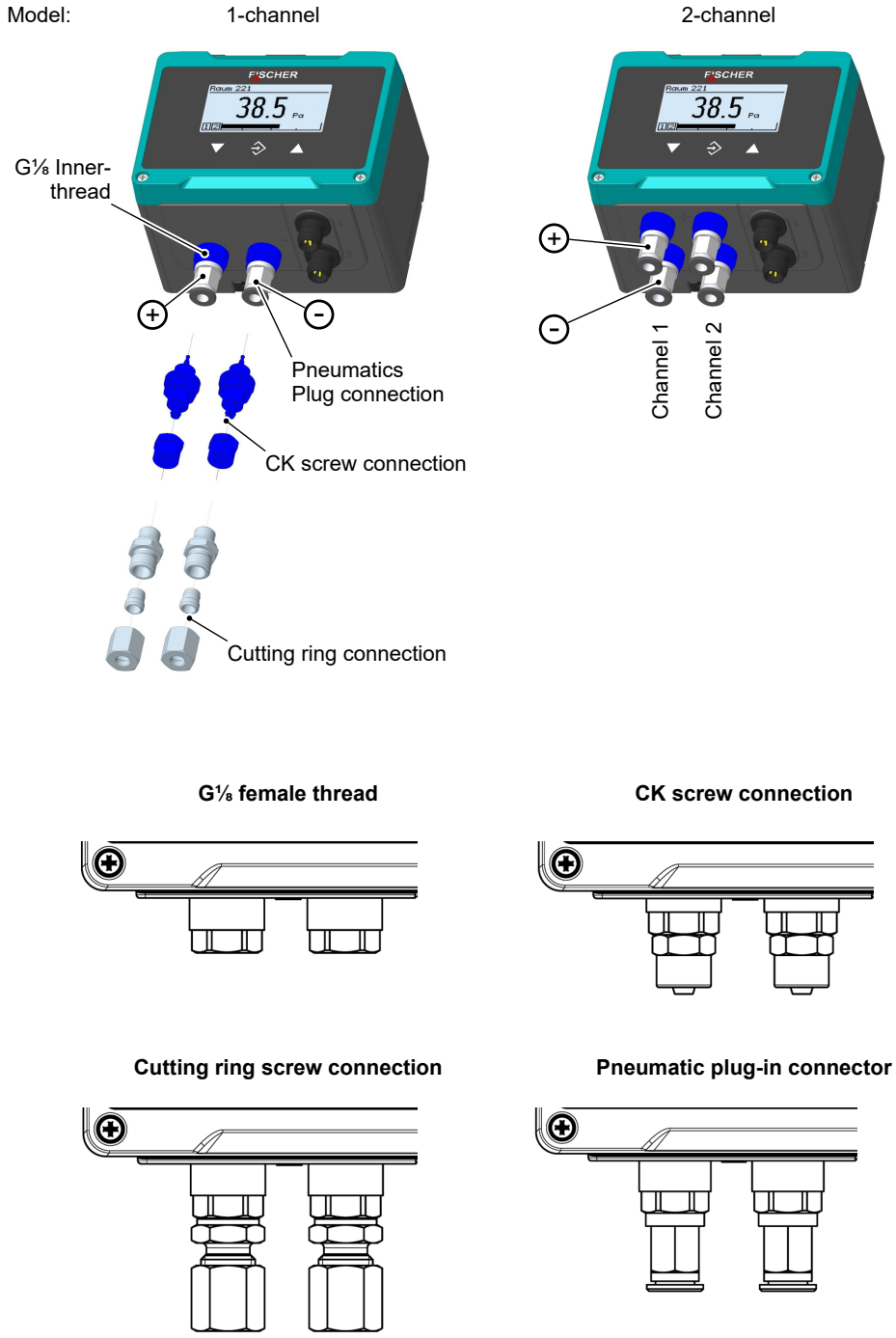

Fig. 2: Process connections

Electric connections

Two M12 flange connectors is installed for the electrical connection.

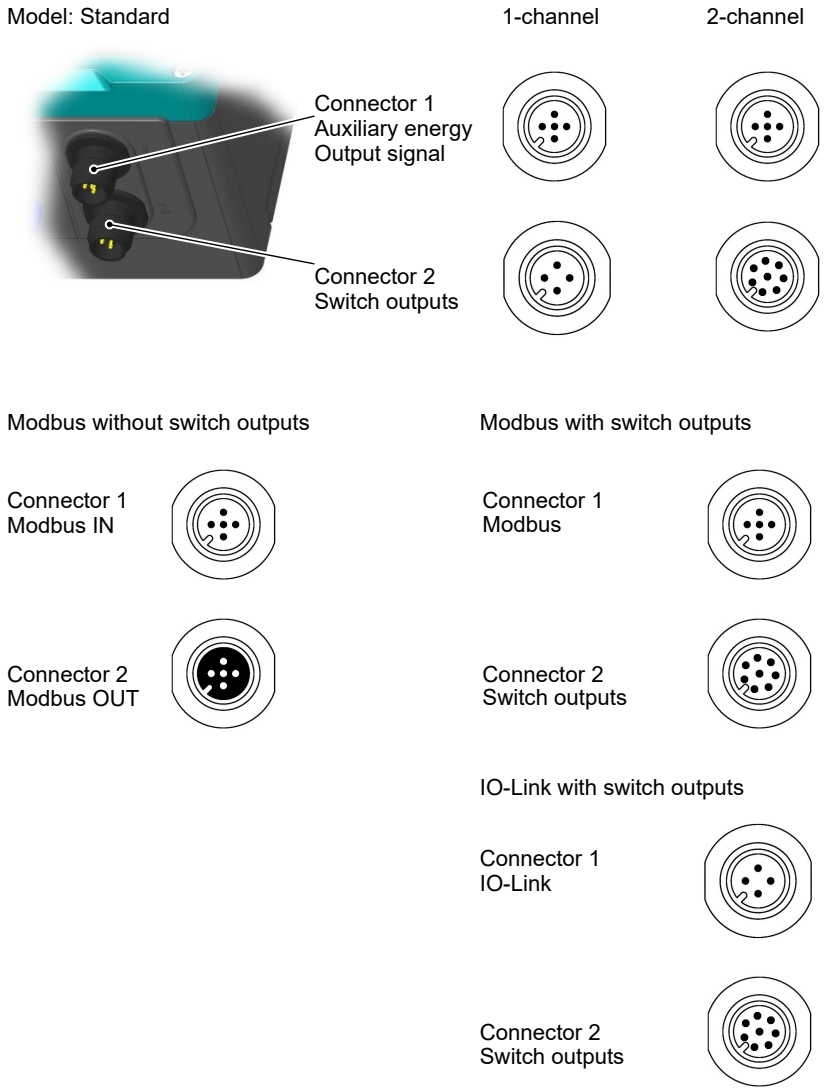

Fig. 3: Electric connections

ATEX model

Fig. 4: ATEX model

2 Technical data

2.1 General

Type designation	DE90	
Pressure type	Differential pressure	
Measurement principle	Piezo-resistive	

Reference conditions (acc. to IEC 61298-1)		
Temperature	+15 to +25 °C	
Relative humidity	45 … 75 %	
Air pressure	86 to 106 kPa	860 to 1060 mbar
Installation position	vertical	

2.2 Input variables

Asymmetric measuring ranges:

Measuring range (Channel 1 2)		Overload	Bursting pressure	Sensor type
	-20 … +80 Pa	700 mbar	1 bar	A
	0 … 25 Pa	700 mbar	1 bar	A
	0 … 40 Pa	700 mbar	1 bar	A
	0 … 60 Pa	700 mbar	1 bar	A
0 … 1 mbar	0 … 100 Pa	700 mbar	1 bar	A
0 … 1.6 mbar	0 … 160 Pa	700 mbar	1 bar	A
0 … 2.5 mbar	0 … 250 Pa	700 mbar	1 bar	A
0 … 4 mbar	0 … 400 Pa	100 mbar	200 mbar	B
0 … 4 mbar	0 … 400 Pa	700 mbar	1 bar	A *
0 … 6 mbar	0 … 600 Pa	100 mbar	200 mbar	B
0 … 6 mbar	0 … 600 Pa	750 mbar	1 bar	A *
0 … 10 mbar	0 … 1 kPa	100 mbar	200 mbar	B
0 … 10 mbar	0 … 1 kPa	750 mbar	1 bar	A *
0 … 16 mbar	0 … 1.6 kPa	310 mbar	410 mbar	B
0 … 25 mbar	0 … 2.5 kPa	310 mbar	410 mbar	B
0 … 40 mbar	0 … 4 kPa	310 mbar	410 mbar	B
0 … 60 mbar	0 … 6 kPa	800 mbar	1 bar	B
0 … 100 mbar	0 … 10 kPa	800 mbar	1 bar	B
0 … 160 mbar	0 … 16 kPa	1,4 bar	2,5 bar	B
0 … 250 mbar	0 … 25 kPa	1,4 bar	2,5 bar	B

*) Measuring range with increased overload and burst pressure capability (see order code/special features).

Symmetric measuring ranges:

Measuring range (Channel 1 2)		Overload	Bursting pressure	Sensor	
	-12,5 … +12,5 Pa	700 mbar	1 bar	A	
	-25 … +25 Pa	700 mbar	1 bar	A	
	-40 … +40 Pa	700 mbar	1 bar	A	
	-60 … +60 Pa	700 mbar	1 bar	A	
-1 … +1 mbar	-100 … +100 Pa	700 mbar	1 bar	A	
-1.6 … +1.6 mbar	-160 … +160 Pa	700 mbar	1 bar	A	
-2.5 … +2.5 mbar	-250 … +250 Pa	100 mbar	200 mbar	B	
-2,5 … +2,5 mbar	-250 … +250 Pa	700 mbar	1 bar	A	*
-4 … +4 mbar	-400 … +400 Pa	100 mbar	200 mbar	B	
-4 … +4 mbar	-400 … +400 Pa	700 mbar	1 bar	A	*
-6 … +6 mbar	-600 …. +600 Pa	100 mbar	200 mbar	B	
-6 … +6 mbar	-600 …. +600 Pa	750 mbar	1 bar	A	*
-10 … +10 mbar	-1 … +1 kPa	100 mbar	200 mbar	B	
-10 … +10 mbar	-1 … +1 kPa	750 mbar	1 bar	A	*
-16 … +16 mbar	-1.6 … +1.6 kPa	310 mbar	410 mbar	B	
-25 … +25 mbar	-2.5 … +2.5 kPa	310 mbar	410 mbar	B	
-40 … +40 mbar	-4 … +4 kPa	310 mbar	410 mbar	B	
-60 … +60 mbar	-6 … +6 kPa	800 mbar	1 bar	B	
-100 … +100 mbar	-10 … +10 kPa	800 mbar	1 bar	B	
-160 … +160 mbar	-16 … +16 kPa	1,4 bar	2,5 bar	B	
-250 … +250 mbar	-25 … +25 kPa	1,4 bar	2,5 bar	B	

*) Measuring range with increased overload and burst pressure capability (see order code/special features).

2.3 Output variables

Analogue outputs

The number of analogue outputs depends on the device version.

Device version	1-channel	2-channel
Number of analogue outputs	1	2

The output signal can be set in the configuration. Upon delivery, both analogue outputs are set to the same signal (see the type plate).

Output signal	0 to 20 mA 4 to 20 mA	0 … 10 V 2 … 10 V 1 … 5 V
Signal range	0.0 to 21.5 mA	0.0 to 10.5 V
Load impedance R_L	≤ 600 Ω	≥ 2 kΩ
Turn down	4:1	4:1

Switch outputs

The number of switch outputs depends on the device model. The assignment of the switch outputs to the channels can be configured freely.

Standard version	1-channel	2-channel
Number of switch outputs	2	4
Assignment on delivery	SP1-> channel 1 SP2-> channel 1	SP1-> channel 1 SP2-> channel 1 SP3-> channel 2 SP4-> channel 2

Modbus (Opt1)	1-channel	2-channel
Number of switch outputs	0	0
Assignment on delivery	---	--

Modbus (Opt2)	1-channel	2-channel
Number of switch outputs	4	4
Assignment on delivery	SP1-> channel 1 SP2-> channel 1 SP3-> channel 1 SP4-> channel 1	SP1-> channel 1 SP2-> channel 1 SP3-> channel 2 SP4-> channel 2

IO-Link	1-channel	2-channel
Number of switch outputs	4	4
Assignment on delivery	SP1-> channel 1 SP2-> channel 1 SP3-> channel 1 SP4-> channel 1	SP1-> channel 1 SP2-> channel 1 SP3-> channel 2 SP4-> channel 2

Type	Potential-free semiconductor switch (MOSFET)
Progr. switching function	1-pole normally open (NO) 1-pole normally closed (NC)
Max. switching voltage	3 to 32 V AC/DC
Max. switching current	0.25 A
Max. switching output	8 W / 8 VA R_{ON} ≤ 4 Ω

2.4 Measuring accuracy

- The specifications for the measurement deviation (e) include linearity and hysteresis.
- All specifications refer to the basic measuring range (see name plate) and a compensation range of -20 to +70 °C.

Sensor type A

Measuring range		Error of measurement (e) [%]		TK Zero point [%/10K]		TK Span [%/10K]	
		Typ.	Max.	Typ.	Max.	Typ.	Max.
	0 … 25 Pa	1.5	2.5	0.5	1.0	0.3	0.6
	0 … 40 Pa	1.0	2.0	0.5	1.0	0.2	0.4
	0 … 60 Pa	0.75	1.5	0.3	0.6	0.2	0.4
0 … 1 mbar	0 … 100 Pa	0.5	1.0	0.3	0.6	0.2	0.4
0 … 1.6 mbar	0 … 160 Pa	0.5	1.0	0.3	0.6	0.2	0.4
0 … 2.5 mbar	0 … 250 Pa	0.5	1.0	0.3	0.6	0.2	0.4
0 … 4 mbar	0 … 400 Pa	0.5	1.0	0.15	0.3	0.05	0.1
0 … 6 mbar	0 … 600 Pa	0.5	0.75	0.15	0.25	0.05	0.1
0 … 10 mbar	0 … 1 kPa	0.25	0.5	0.1	0.2	0.05	0.1
	-12.5 … +12.5 Pa	1,5	2,5	0,5	1,0	0,3	0,6
	-20 … +80 Pa	0,5	1,0	0,3	0,6	0,2	0,4
	-25 … +25 Pa	1.0	2.0	0.4	0.8	0.2	0.4
	-40 … +40 Pa	0.75	1.5	0.3	0.6	0.2	0.4
	-60 … +60 Pa	0.5	1.0	0.3	0.6	0.2	0.4
-1 … +1 mbar	-100 … +100 Pa	0.5	1.0	0.3	0.6	0.2	0.4
-1.6 … +1.6 mbar	-160 … +160 Pa	0.5	1.0	0.3	0.6	0.2	0.4
-2.5 … +2.5 mbar	-250 … +250 Pa	0.5	1.0	0.15	0.3	0.05	0.1
-4 … +4 mbar	-400 … +400 Pa	0.5	1.0	0.1	0.2	0.05	0.1
-6 … +6 mbar	-600 …. +600 Pa	0.5	0.75	0.1	0.15	0.05	0.1
-10 … +10 mbar	-1 … +1 kPa	0.25	0.5	0.05	0.1	0.05	0.1

Sensortyp B

Messbereich		Messabweichung (e) [%]		TK Nullpunkt [%/10K]		TK Spanne [%/10K]	
		Typ.	Max.	Typ.	Max.	Typ.	Max.
0 … 4 mbar	0 … 400 Pa	0.5	1.0	0.15	0.3	0.05	0.1
0 … 6 mbar	0 … 600 Pa	0.5	0.75	0.15	0.25	0.05	0.1
0 … 10 mbar	0 … 1 kPa	0.25	0.5	0.1	0.2	0.05	0.1
0 … 16 mbar	0 … 1.6 kPa	0.25	0.5	0.15	0.3	0.05	0.1
0 … 25 mbar	0 … 2.5 kPa	0.25	0.5	0.15	0.25	0.05	0.1
0 … 40 mbar	0 … 4 kPa	0.25	0.5	0.1	0.2	0.05	0.1
0 … 60 mbar	0 … 6 kPa	0.25	0.5	0.1	0.2	0.05	0.1
0 … 100 mbar	0 … 10 kPa	0.25	0.5	0.1	0.15	0.05	0.1
0 … 160 mbar	0 … 16 kPa	0.25	0.5	0.05	0.1	0.05	0.1
0 … 250 mbar	0 … 25 kPa	0.25	0.5	0.05	0.1	0.05	0.1
-2.5 … +2.5 mbar	-250 … +250 Pa	0.5	1.0	0.15	0.3	0.05	0.1
-4 … +4 mbar	-400 … +400 Pa	0.5	1.0	0.1	0.2	0.05	0.1
-6 … +6 mbar	-600 …. +600 Pa	0.5	0.75	0.1	0.15	0.05	0.1
-10 … +10 mbar	-1 … +1 kPa	0.25	0.5	0.05	0.1	0.05	0.1
-16 … +16 mbar	-1.6 … +1.6 kPa	0.25	0.5	0.1	0.2	0.05	0.1
-25 … +25 mbar	-2.5 … +2.5 kPa	0.25	0.5	0.1	0.15	0.05	0.1
-40 … +40 mbar	-4 … +4 kPa	0.25	0.5	0.05	0.1	0.05	0.1
-60 … +60 mbar	-6 … +6 kPa	0.25	0.5	0.05	0.1	0.05	0.1
-100 … +100 mbar	-10 … +10 kPa	0.25	0.5	0.05	0.1	0.05	0.1
-160 … +160 mbar	-16 … +16 kPa	0.25	0.5	0.05	0.1	0.05	0.1
-250 … +250 mbar	-25 … +25 kPa	0.25	0.5	0.05	0.1	0.05	0.1

2.5 Digital interfaces

USB interface

USB On The Go	2.0
Data rate	12 Mbit/s (Full Speed)
Connection	Micro USB type B
Communication	Host/Device mode

Modbus RTU interface

interface	RS 485
Report	Modbus RTU
Modbus specification	Application Protocol Specification V1.1b3 (26 April 2012)
Address	1 … 247
Baud rate	2400 … 115200 baud
Parity	Even, uneven, parity
Stop bits	1…2

IO-Link Interface

Connection	M12-4 Class A
IO-Link specification	V1.1
Pin assignment	as per IEC 60974-5-2
Device energy supply	max. 200 mA
Data transmission rates	COM 2 = 38.4 kBd

2.6 Auxiliary energy

NOTICE! Only a CE-compliant mains adapter with a slow 200 mA fuse may be used in the power supply circuit for ATEX devices.

Rated voltage	24 V AC/DC	
Admissible operating voltage U_b	19.2 to 28.8 V AC/DC	Default Modbus RTU
	18 to 30 V DC	IO-Link
Power consumption	Typ. 2W (VA) Max. 3W (VA)	

2.7 Operating conditions

	Standard	ATEX
Ambient temperature range	-20 … +70 °C	-20 … +60 °C
Media temperature range	-20 … +70 °C	-20 … +60 °C
Storage temperature range	-20 … +70 °C	-20 … +70 °C
Protection class	IP65	IP65
EMC	EN 61326-1:2013 EN 61326-2-3:2013	
ATEX	EN IEC 60079-0:2018 EN IEC 60079-7:2015/A1:2018 EN 60079-31:2014	
RoHS	EN IEC 63000:2018	

2.8 Display

Display	Full graphic LC display
Resolution	128 x 64 Pixel
Backlight	RGB
Measured value display	6 digits

2.9 Construction design

Process connection

		Outer Ø	Inner Ø
CK screw connections made of aluminium	Hose	6 mm	4 mm
	Hose	8 mm	6 mm
Pneumatic plug-in connector in nickel-plated brass	Hose	6 mm	4 mm
	Hose	8 mm	6 mm
Cutting ring connection in stainless steel	Pipe	6 mm	
	Pipe	8 mm	

Electrical connection

Standard version	1-channel	2-channel
Connector 1: Auxiliary energy, output	5-pin male	5-pin male
Connector 2: Switch outputs	4-pin male	8-pin male

Modbus without switch outputs	1-channel	2-channel
Connector 1: Modbus IN	5-pin male	5-pin male
Connector 2: Modbus OUT	5-pin female	5-pin female

Modbus with switch outputs	1-channel	2-channel
Connector 1: Modbus	5-pin male	5-pin male
Connector 2: Switch outputs	8-pin male	8-pin male

IO-Link with switch outputs	1-channel	2-channel
Connector 1: IO-Link	4-pin male	4-pin male
Connector 2: Switch outputs	8-pin male	8-pin male

General activities

Installation position	User-defined
Dimensions (without connections)	120 x 81.5 x 95 mm
Weight	Max. 380 g

2.9.1 Materials

Materials of parts in contact with medium	
Sensor type A	PBT plastic, rubber, glass, gold, Tygon®, aluminium, titanium and brass
Sensor type B	Silicon, PVC, FKM, aluminium, brass, stainless steel, PP/ EPDM

Materials of parts in contact with surroundings
Polyester, PET, polyamide 6.6, aluminium, nickel-plated brass, stainless steel

2.9.2 Dimensional drawings

All dimensions in mm unless otherwise stated

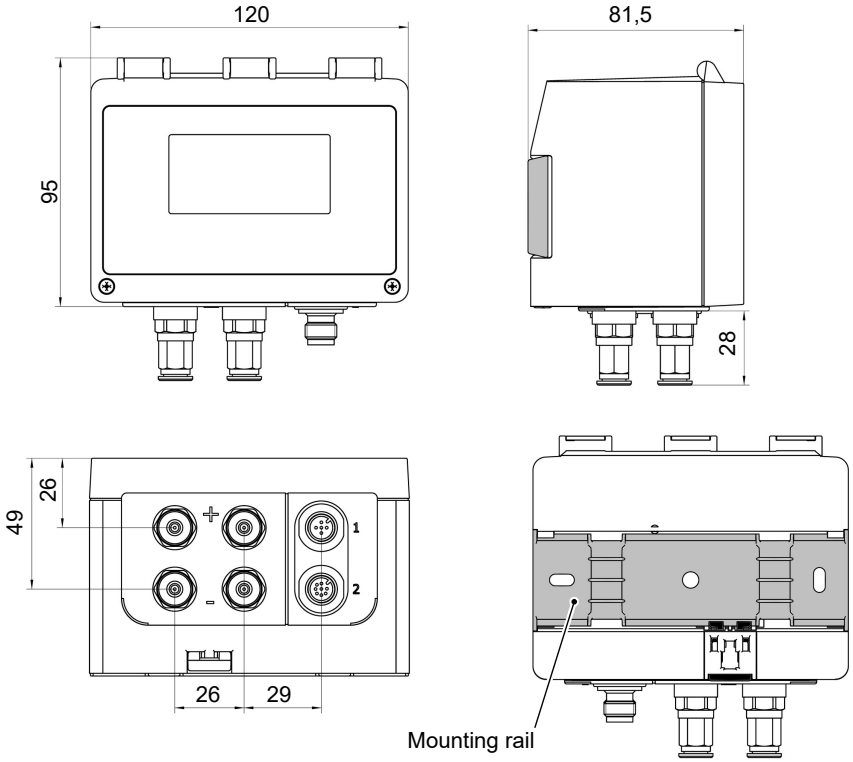

Fig. 5: Dimension drawing

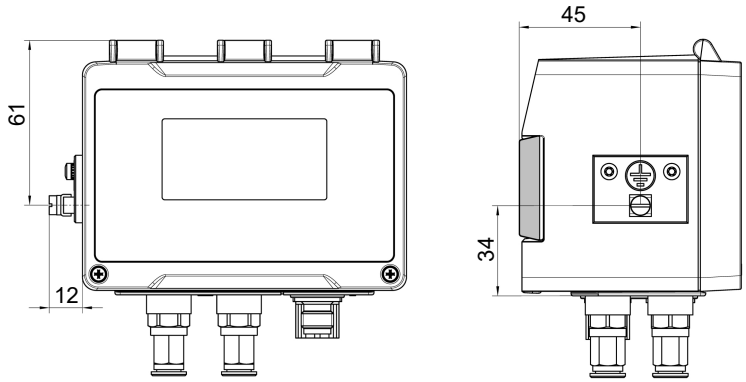

Fig. 6: Dimension drawing ATEX

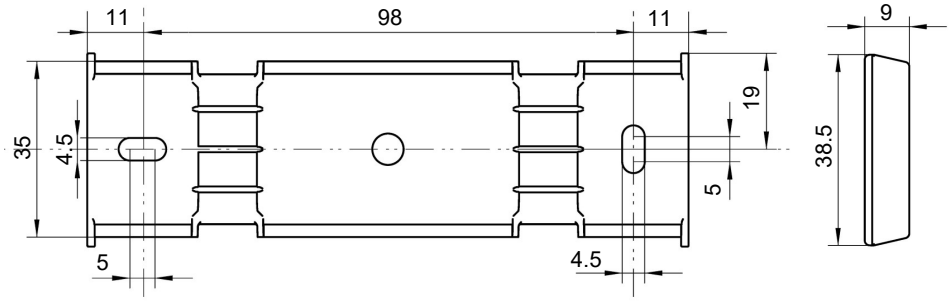

Fig. 7: Mounting rail

Process connections

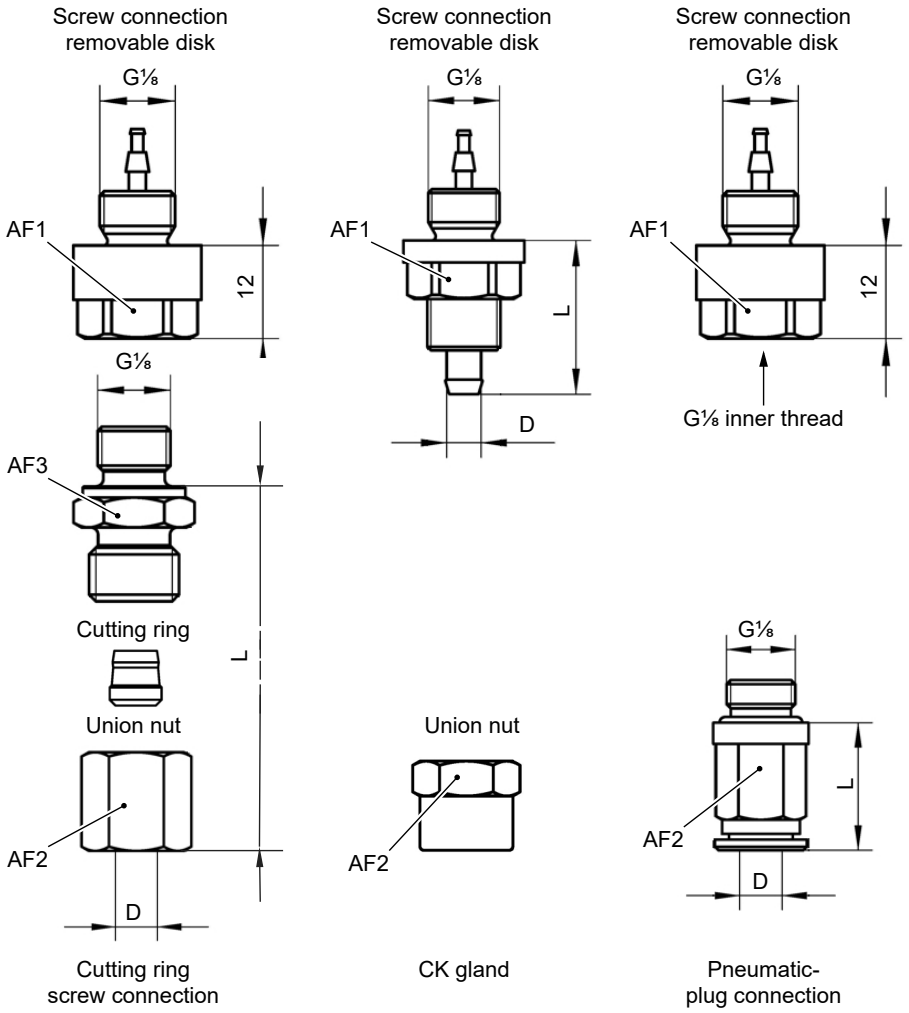

Fig. 8: Process connection Options

Prozessanschluss		D	d	L	AF1	AF2	AF3
Cutting ring screw connection	Pipe	6	---	23.5	14	14	14
		8	---	24.5	14	17	14
CK gland	Hose	6	4	21	14	12	---
		8	6	21	14	14	---
Pneumatic plug connection	Pneumatic hose	6	4	18	14	11	---
		8	6	20.5	14	13	---

D: outside diameter; d: inside diameter

3 Order codes

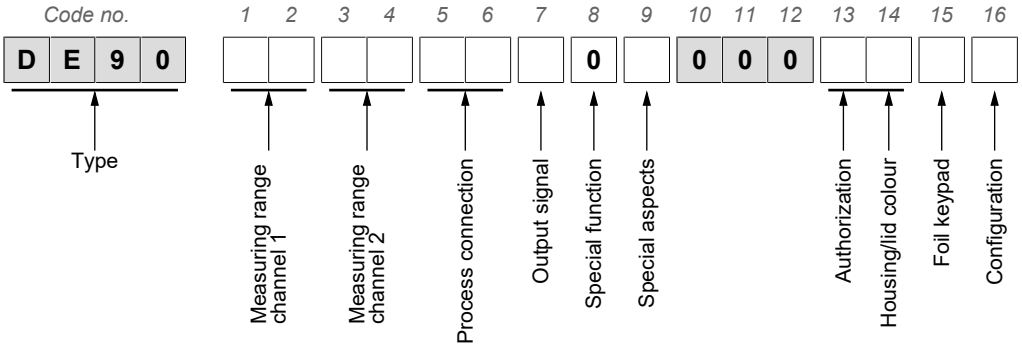

Measuring range channel 1:

[1.2]		[1.2]		[1.2]	
		D1	0 to 25 Pa		
		D2	0 to 40 Pa		
		D3	0 to 60 Pa		
51	0 to 1 mbar	**D4**	0 to 100 Pa		
97	0 to 1.6 mbar	**D5**	0 to 160 Pa		
98	0 … 2.5 mbar	**D6**	0 to 250 Pa		
52	0 to 4 mbar	**D7**	0 … 400 Pa		
53	0 … 6 mbar	**D8**	0 to 600 Pa		
54	0 … 10 mbar	**N1**	0 to 1 kPa	**D9**	0 to 1000 Pa
55	0 … 16 mbar	**N2**	0 to 1.6 kPa	**O1**	0 to 1600 Pa
56	0 … 25 mbar	**N3**	0 … 2.5 kPa	**E2**	0 to 2500 Pa
57	0 … 40 mbar	**N4**	0 … 4 kPa	**E3**	0 to 4000 Pa
58	0 … 60 mbar	**N5**	0 to 6 kPa	**E4**	0 to 6000 Pa
59	0 … 100 mbar	**E5**	0 to 10 kPa	**1P**	0 to 10000 Pa
60	0 … 160 mbar	**E6**	0 to 16 kPa	**2P**	0 to 16000 Pa
82	0 … 250 mbar	**E7**	0 to 25 kPa	**3P**	0 to 25000 Pa
		L0	-20 to +80 Pa		
		L4	-12.5 to +12.5 Pa		
		L5	-25 to +25 Pa		
		R6	-40 to +40 Pa		
		2L	-60 to +60 Pa		
A4	-1 … +1 mbar	**L7**	-100 to +100 Pa		
A5	-1.6 to +1.6 mbar	**R7**	-160 to +160 Pa		
A6	-2.5 … +2.5 mbar	**L6**	-250 to +250 Pa		
A7	-4 … +4 mbar	**R1**	-400 to +400 Pa		
A8	-6 … +6 mbar	**R2**	-600 …. +600 Pa		
A9	-10 … +10 mbar	**L8**	-1 to +1 kPa		
B1	-16 … +16 mbar	**L9**	-1.6 to +1.6 kPa		
B2	-25 … +25 mbar	**M6**	-2.5 to +2.5 kPa		
C5	-40 … +40 mbar	**M7**	-4 to +4 kPa		
B3	-60 … +60 mbar	**M8**	-6 to +6 kPa		
B4	-100 … +100 mbar	**R8**	-10 to +10 kPa		
R5	-160 … +160 mbar	**R9**	-16 to +16 kPa		
B6	-250 … +250 mbar	**T1**	-25 to +25 kPa		

Measuring range channel 2:

[3.4]		[3.4]		[3.4]	
00	None				
		D1	0 to 25 Pa		
		D2	0 to 40 Pa		
		D3	0 to 60 Pa		
51	0 to 1 mbar	**D4**	0 to 100 Pa		
97	0 to 1.6 mbar	**D5**	0 to 160 Pa		
98	0 … 2.5 mbar	**D6**	0 to 250 Pa		
52	0 to 4 mbar	**D7**	0 … 400 Pa		
53	0 … 6 mbar	**D8**	0 to 600 Pa		
54	0 … 10 mbar	**N1**	0 to 1 kPa	**D9**	0 to 1000 Pa
55	0 … 16 mbar	**N2**	0 to 1.6 kPa	**O1**	0 to 1600 Pa
56	0 … 25 mbar	**N3**	0 … 2.5 kPa	**E2**	0 to 2500 Pa
57	0 … 40 mbar	**N4**	0 … 4 kPa	**E3**	0 to 4000 Pa
58	0 … 60 mbar	**N5**	0 to 6 kPa	**E4**	0 to 6000 Pa
59	0 … 100 mbar	**E5**	0 to 10 kPa		
60	0 … 160 mbar	**E6**	0 to 16 kPa		
82	0 … 250 mbar	**E7**	0 to 25 kPa		
		L0	-20 to +80 Pa		
		L4	-12.5 to +12.5 Pa		
		L5	-25 to +25 Pa		
		R6	-40 to +40 Pa		
		2L	-60 to +60 Pa		
A4	-1 … +1 mbar	**L7**	-100 to +100 Pa		
A5	-1.6 to +1.6 mbar	**R7**	-160 to +160 Pa		
A6	-2.5 … +2.5 mbar	**L6**	-250 to +250 Pa		
A7	-4 … +4 mbar	**R1**	-400 to +400 Pa		
A8	-6 … +6 mbar	**R2**	-600 …. +600 Pa		
A9	-10 … +10 mbar	**L8**	-1 to +1 kPa		
B1	-16 … +16 mbar	**L9**	-1.6 to +1.6 kPa		
B2	-25 … +25 mbar	**M6**	-2.5 to +2.5 kPa		
C5	-40 … +40 mbar	**M7**	-4 to +4 kPa		
B3	-60 … +60 mbar	**M8**	-6 to +6 kPa		
B4	-100 … +100 mbar	**R8**	-10 to +10 kPa		
R5	-160 … +160 mbar	**R9**	-16 to +16 kPa		
B6	-250 … +250 mbar	**T1**	-25 to +25 kPa		

Process connection:

[5.6]	
00	G⅛ female thread (aluminium)
40	CK screw connection in aluminium for 6/4 mm hose
41	CK screw connection in aluminium for 8/6 mm hose
P6	Nickel-plated brass pneumatic plug-in connector for 6/4 mm hose
P8	Nickel-plated brass pneumatic plug-in connector for 8/6 mm hose
24	Stainless steel cutting ring connection for 6 mm pipe
25	Cutting ring connection in stainless steel for 8 mm pipe

Output signal:

[7]	
0	None
Switchable, preset at the factory:	
C	0 … 10 V
A	0 to 20 mA
P	4 … 20 mA
Digital interface:	
M	RS485 Modbus RTU (without switch outputs)
N	RS485 Modbus RTU (with 4 switch outputs)
I	IO-Link interface (with 4 switch outputs)

Special functions:

[8]	
0	None

Special features:

[9]				
0	None			
1	Sensor with increased overload and bursting pressure strength of 1 bar only for the following pressure ranges:			
	52	0 to 4 mbar	**D7**	0 … 400 Pa
	53	0 … 6 mbar	**D8**	0 to 600 Pa
	54	0 … 10 mbar	**D9**	0 to 1000 Pa
	A6	-2.5 … +2.5 mbar	**N1**	0 to 1 kPa
	A7	-4 … +4 mbar	**L6**	-250 to +250 Pa
	A8	-6 … +6 mbar	**R1**	-400 to +400 Pa
	A9	-10 … +10 mbar	**R2**	-600 …. +600 Pa
			L8	-1 to +1 kPa

Approval and housing/lid colour:

[13.14]	Approval	Housing colour	Lid colour
00	None	Anthracite	Green
R1	ATEX zones 2 and 22	Black (conductive housing)	Black

Membrane keypad:

[15]	
0	FISCHER
1	Neutral

Configuration:

[16]	Preset at the factory *)
0	“Standard” configuration
1	“Linear characteristic curve” configuration
2	“Flow rate” configuration
3	“Table” configuration
4	“Volume flow” configuration with K factor
5	“Equation” configuration
6	“Dyn. filter monitoring” configuration
7	“Difference” configuration
Z	“Customer-specific” configuration

*) The configuration can be changed on the device at any time. The delivery state is defined by the order code. For details, see the operating instructions.

3.1 Accessories

M12 connection cables

Designation	No. of pins	Length	Order No.
PUR connection cable with M12 connector	4 pins	2 m	06401993
		5 m	06401994
		10 m	06401572
	5-pin	2 m	06401995
		5 m	06401996
		10 m	06401573
	8-pin	2 m	09001844
		5 m	09011146
		10 m	09011016

USB interface

Designation		Order No.
Connection cable, USB-A on USB micro-B connector	2 m	09007340
Stick USB 2.0, USB-A/micro-B connector	16 GB	09007316

Modbus

Designation		Order No.
Modbus terminating resistor	120 ohm socket	06411280
	120 ohm connector	06411279

Connection set

To connect the differential pressure transmitter to the ventilation channels comprising

- 2 x PVC hose
- 2 x ABS weld socket incl. attachment screws.

Designation	Hose	Length	Order No.
Plastic connection set	2 x 6/4 mm	1 m	04005129
		2.5 m	04005148
		5 m	04005163
		10 m	04005216
	2 x 8/6 mm	1 m	04005217
		5 m	04005218

Comments:
For 2-channel devices, two connection sets may be required in some circumstances.

Complete connection set

To connect the differential pressure transmitter to the ventilation channels comprising

- 2 x PVC hose
- 2 x ABS weld socket incl. attachment screws
- 2 x field-wireable M12 connector
  Channel 1: 4-pin/5-pin socket
  Channel 2: 8-pin/5-pin socket

Designation		Hose	Length	Order No.
Complete connection set	1-channel	4/6 mm	1 m	06411560
		6/8 mm	1 m	06411561
	2 channels	4/6 mm	1 m	06411562
		6/8 mm	1 m	06411563

Recalibration connection set

To ensure correct measurements at all times, it is necessary to calibrate the pressure transducer regularly and bring it back in line with national or international standards.

Designation		Order No.
Recalibration connection set		06411887
2x	Push-in T-fitting, male thread G1/8 Female thread G1/8 - for hose, outer Ø 6 mm	
2x	Plug-in sleeve Ø 6 mm	
2x	Ball valve QH-QS-6-1/8	

Accessories for outdoor use

Designation	Material	Order No.
Canopy	Stainless steel	02006130

Software

The inTouch configuration software is available for download on our website (fischermesstechnik.de).

3.2 Information about the document

This document contains all technical data about the device. Great care was taken when compiling the texts and illustrations. nevertheless, errors cannot be ruled out.

Subject to technical amendments.

Notes

FISCHER Mess- und Regeltechnik GmbH
Bielefelder Str. 37a
D-32107 Bad Salzuflen

Tel. +49 5222 974-0
Fax +49 5222 7170
www.fischermesstechnik.de
info@fischermesstechnik.de

Technische Änderungen vorbehalten. Subject to technical changes. Sous réserve de modifications techniques.