developing solutions

ELECTROPROJECT

FISCHER MESS- UND REGELTECHNIK

Modbus

RoHS III COMPLIANT

UK CA

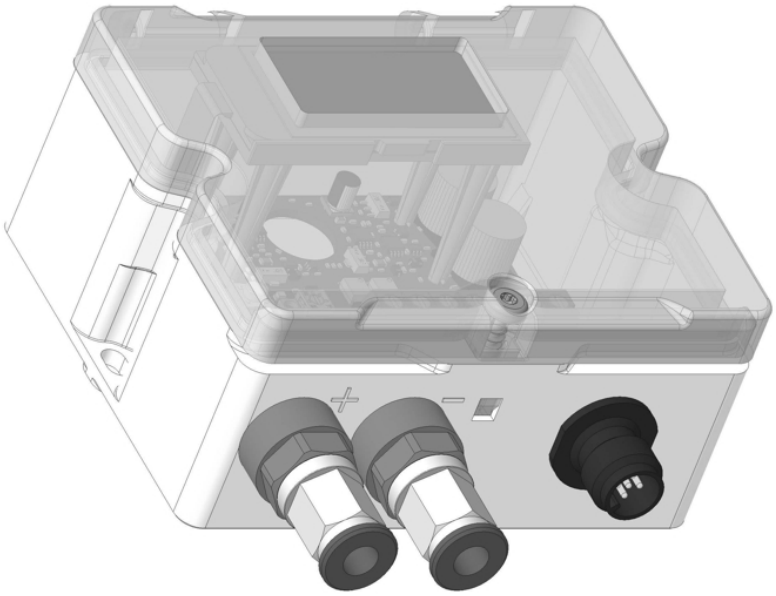

Data sheet

DE85

Differential pressure transmitter
ECO-LINE ®

for industrial applications

09015311 • DB_EN_DE85 • Rev. ST4-F • 12/25

1 Product and functional description

1.1 Delivery scope

- Differential pressure transmitter DE85 ECO-LINE®
  version as stated on the type plate
- Operating Manual
- Closing screw for degree of protection IP65

1.2 Performance characteristics

Typical applications

- Clean room technology
- Monitoring ventilation ducts
- Filter monitoring
- Volume flow measurement
- Control of frequency converters
- Measuring and monitoring positive, negative and differential pressures

Main features

- Robust, resistant to overpressure and maintenance-free
- simple configuration per DIP switch and buttons
- Measuring ranges
  - 0.25 mbar to 250 mbar
  - 25 Pa to 25 kPa
- Measuring accuracy up to 1.0%
- Setting options of the DIP-switches
  - Measurement range: –x … +x / 0 … +x / 0 … -x
  - Characteristic curve: rising / falling
  - Measuring function: linear / square rooted
  - Damping
  - Unit
- Offset correction with zero point button
- Analogue output signal
  - Rising characteristic curve
    0/4 … 20 mA or 0/2 … 10 V; 3-wire
    4 … 20 mA; 2-wire
  - Falling characteristic curve
    20 … 4/0 mA or 10 … 2/0 V; 3-wire
    20 … 4 mA; 2-wire
- Optional full graphic LC display
- Optional digital interface RS485 Modbus RTU
- Silicone-free

1.3 Intended use

The DE85 is a differential pressure transmitter for industrial applications. It is suitable for measuring overpressure, under-pressure and differential pressure in neutral gaseous media.

The device may only be used for the purpose stipulated by the manufacturer. The manufacturer will not be liable for damage arising from incorrect or improper use.

WARNING! If the device is intended for outdoor use, we recommend using a suitable protective housing for permanent protection against UV radiation and as a protective measure against continuous rain and snowfall. A protective roof is not sufficient!

1.4 Function diagram

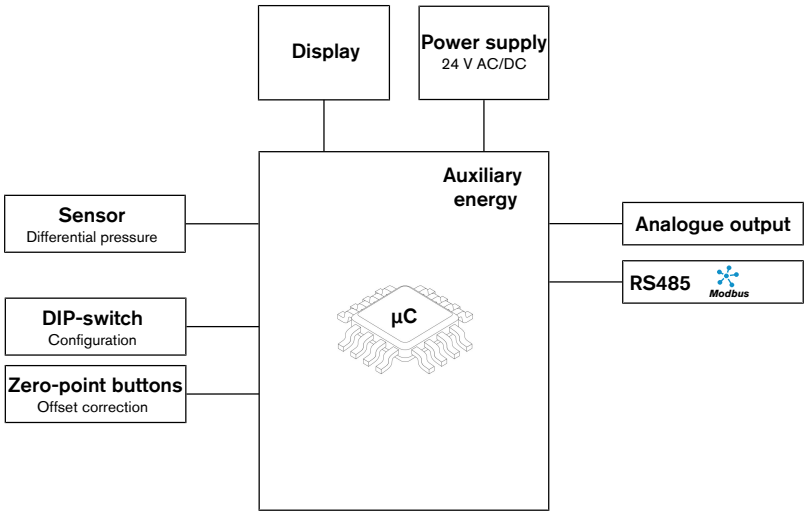

Fig. 1: Function diagram

1.5 Design and mode of operation

The device is based on a piezo-resistive sensor element that is suitable for measuring overpressure, under-pressure and differential pressure. The pressures to be compared have a direct effect on a silicon membrane equipped with a measuring bridge.

When the pressure is equal, the measuring membrane is in its idle state. If a pressure difference occurs, the membrane is deflected and a resistance change takes place on the attached measuring bridge. This change is evaluated by the device's electronics and transformed into the an analogue output signal with a rising or falling characteristic curve. The output signal can also be dampened and square rooted.

- Alternatively, the device is available as a 2-wire or Modbus RTU variant.
- All versions can be equipped with a full-graphic LC display.

In total, the device can be supplied in the following configurations.

	3-wire	2-wire	Modbus RTU
Analogue output 0/4 … 20 mA or 0/2 … 10 V, switchable	x		
Current loop 4 … 20 mA		x	
RS485 Modbus RTU			x
Options:			
Full graphic LC display	x	x	x

1.6 Equipment versions

The DE85 is differentiated into the version with 'with measurement value display' and 'without measurement value display'. Both versions are available as a 2-conductor as well as a 3-conductor version.

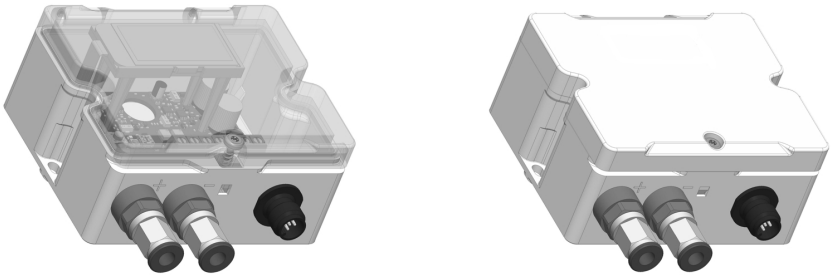

With measuring value display **Without measuring value display**

Fig. 2: Product summary

1.6.1 Connections

All combinations of process and electrical connection are available.

Process connection **Electrical connection**

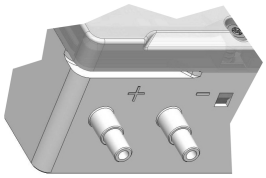

Hose nipple

M12 plug connector

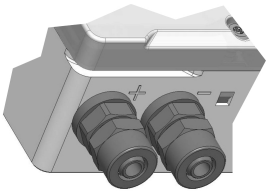

CK screw connection

Cable screw connection

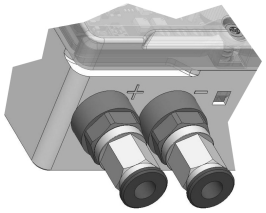

Pneumatic plug connection

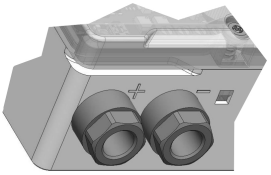

Connection nozzle
with inner thread G⅛

Fig. 3: Process and electrical connection

2 Technical data

2.1 General

Type designation	DE85	
Pressure type	Differential pressure	
Measurement principle	Piezo-resistive	
Special properties	Silicone-free	

Reference conditions (acc. to IEC 61298-1)		
Temperature	+15 to +25 °C	
Relative humidity	45 … 75 %	
Air pressure	86 to 106 kPa	860 to 1060 mbar
Installation position	vertical	

2.2 Input variables

Every measuring range is configured with the DIP switch as follows:

- Measuring range characteristic curve
  - rising (e.g. 0 … x)
  - falling (e.g. 0 … -x)
- Measuring range symmetry
  - Symmetric bidirectional (e.g –x … +x)
  - Asymmetric unidirectional (e.g. 0 … x)
- Unit in [mbar] or [Pa]

Measuring range	Overload	Bursting pressure
≤ -2.50 … 2.50 mbar / -250 … 250 Pa	700 mbar	1 bar
≤ -10.00 … 10.00 mbar / -1000 … 1000 Pa	100 mbar	200 mbar
≤ -40.00 … 40.00 mbar / -4000 … 4000 Pa	310 mbar	410 mbar
≤ -100.00 … 100.00 mbar / -10 … 10 kPa	800 mbar	1 bar
≤ -250.00 … 250.00 mbar / -25 … 25 kPa	1.4 bar	2.5 bar

2.3 Measuring accuracy

- Based on the reference temperature, the information only applies within the compensation range.
- The characteristic curve deviation contains linearity, hysteresis and non-repetitiveness.
- Compensation range: -20 … +70 °C.
- The information is provided for the rising measuring range characteristic curve. They also apply for the falling characteristic curve.

Characteristic curve deviation

						Characteristic curve dev. [%]			
Measurement range [mbar]			Measurement range [Pa]			Code 1K		Code 2M	
Start		End	Start		End	Typ.	Max.	Typ.	Max.
-0.20	**…**	**0.80**	**-20**	**…**	**80**	1.5	2.5	0.5	1.0
0	…	0.80	0	…	80			0.75	1.5
-0.25	**…**	**0.25**	**-25**	**…**	**25**			---	---
0	…	0.25	0	…	25			---	---
-0.50	**…**	**0.50**	**-50**	**…**	**50**			0.5	1.0
0	…	0.50	0	…	50			1.0	2.0
-0.60	**…**	**0.60**	**-60**	**…**	**60**			0.5	1.0
0	…	0.60	0	…	60			0.75	1.5

Measurement range [mbar]			Measurement range [Pa]			Characteristic curve dev. [%]			
						Code 1K		Code 2M	
Start		End	Start		End	Typ.	Max.	Typ.	Max.
-1.00	**...**	**1.00**	**-100**	**...**	**100**	1.5	2.5	0.5	1.0
0	…	1.00	0	…	100				
-1.60	**...**	**1.60**	**-160**	**...**	**160**				
0	…	1.60	0	...	160				
-2.50	**...**	**2.50**	**-250**	**...**	**250**				
0	…	2.50	0	...	250				
-4.00	**...**	**4.00**	**-400**	**...**	**400**				
0	…	4.00	0	...	400				
-5.00	**...**	**5.00**	**-500**	**...**	**500**				
0	…	5.00	0	...	500				
-6.00	**...**	**6.00**	**-600**	**...**	**600**				
0	…	6.00	0	...	600				
-10.0	**...**	**10.0**	**-1000**	**...**	**1000**				
0	…	10.0	0	...	1000				
-16.0	**...**	**16.0**	**-1600**	**...**	**1600**				
0	…	16.0	0	...	1600				
-25.0	**...**	**25.0**	**-2500**	**...**	**2500**				
0	…	25.0	0	...	2500				
-40.0	**...**	**40.0**	**-4000**	**...**	**4000**				
0	…	40.0	0	...	4000				
-50.0	**...**	**50.0**	**-5000**	**...**	**5000**				

Measurement range [mbar]		Measurement range [Pa]		Characteristic curve dev. [%]			
				Code 1K		Code 2M	
Start	End	Start	End	Typ.	Max.	Typ.	Max.
0	… 50.0	0	... 5000				
-60.0	**... 60.0**	**-6000**	**... 6000**				
0	… 60.0	0	... 6000				

Measurement range [mbar]		Measurement range [kPa]		Characteristic curve dev. [%]			
				Code 1K		Code 2M	
Start	End	Start	End	Typ.	Max.	Typ.	Max.
-100	**... 100**	**-10**	**... 10**	1.5	2.5	0.5	1.0
0	… 100	0	... 10				
-160	**... 160**	**-16**	**... 16**				
0	… 160	0	... 16				
-250	**... 250**	**-25**	**... 25**				
0	… 250	0	... 25				

Temperature coefficient

	Measuring range limits		Tc-zero [%/10K]		TK span [%/10K]	
	mbar	Pa	Typ.	Max.	Typ.	Max.
	-0.25 … 0.25	-25 … 25	0.4	0.8	0.20	0.40
≤	-2.50 … 2.50	-250 … 250	0.3	0.6	0.20	0.40
≥	-4.00 … 4.00	-400 … 400	0.2	0.4	0.15	0.30

2.4 Output sizes

The DIP switch can be used can be configured between current and voltage output with a switchable live-zero, and between rising and falling characteristic curve.

The data for the rising characteristic curve are stated in the following. The data for the falling characteristic curve are identical.

Analogue output 3-conductor

Standard (Code: AL)

Output signal	**0 … 20 mA** **4 … 20 mA**	**0 … 10 V** **2 … 10 V**
Signal range	0.0 to 21.5 mA	0.0 to 10.5 V
Load impedance R_L	≤ 600 Ω	≥ 2 kΩ

NAMUR (Code: NL)

Output signal	**0 to 20 mA**	**4 … 20 mA**
Signal range	0.0 … 20.5 mA	3.8 … 20.5 mA
Load impedance R_L	≤ 600 Ω	
Error signal	21.5 mA	

Output signal	**0 … 10 V**	**2 … 10 V**
Signal range	0.0 to 10.5 V	1.8 … 10.5 V
Load impedance R_L	≥ 2 kΩ	
Error signal	10.75 V	

Analogue output 2-conductor

Standard (Code: B9)

Output signal	**4 … 20 mA**
Signal range	3.5 … 21.5 mA
Admissible resistance R_L	$R_L \leq (Ub – 7 V)/0.02 A$

2.5 Digital interfaces

Modbus RTU interface

interface	RS 485
Report	Modbus RTU
Modbus specification	Application Protocol Specification V1.1b3 (April 26, 2012)
Address	1 … 128
Baud rate	2400 … 115200 Baud
Parity	Even, uneven, parity
Stopbits	1…2

2.6 Auxiliary energy

3-conductor version | Modbus RTU

Nominal voltage	24 V AC/DC
Admissible operating voltage U_b	19.2 V … 28.8 V AC/DC
Power consumption	< 2 W

2-conductor version

Nominal voltage	24 V DC
Admissible operating voltage U_b	12 V … 28.8 V DC

2.7 Operating conditions

Ambient temperature range	-20 to +70 °C
Medium temperature range	-20 to +70 °C
Storage temperature range	-20 to +70 °C
Protection class	IP54 IP65 with enclosed screw plug
EMC	EN IEC 61326-1:2021 EN IEC 61326-2-3:2021 EN 60730-1:2016 + A1:2019
RoHS	EN IEC 63000:2018

2.8 Display

Display	Full graphic LC display
Resolution	128 x 64 Pixel
Back lighting	None
Meas. data display	Display format depends on the measuring range

2.9 Construction design

Process connection	Code	Hose	
		Outer Ø	Inner Ø
Connection nozzle with G⅛ inner thread	00	---	--
Plug nipple	42	6 mm	4 mm
		8 mm	6 mm
CK screw connection	40	6 mm	4 mm
	41	8 mm	6 mm
Pneumatic plug connector	P6	6 mm	4 mm
	P8	8 mm	6 mm

Electrical connection	2-wire	3-wire	Modbus RTU
Cable screw connection M16 x 1.5	Print terminal	Print terminal	Print terminal
	No. of poles 3	No. of poles 3	No. of poles 5
M12 plug connection	4-pin	4-pin	5-pin

Cable screw connection clamping area	5 mm to 10 mm
Fine-stranded conductor (with ferrule)	0.25 mm^2 to 1 mm^2
Single stranded conductor	0.34 mm^2 to 1.5 mm^2
Installation position	User-defined
Dimensions (without connections)	92 x 45 x 83
Weight	Max. 150 g

2.9.1 Materials

Materials of the parts that come into contact with the medium	
Plug nipple	Polycarbonate PC
CK screw connection	Aluminium anodised
Pneumatic plug connector	MS nickel-plated, NBR
Connection nozzle with G⅛ inner thread	Aluminium anodised
Sensor element	Silicon
Hoses	EPDM

Materials of the parts that come into contact with the surroundings	
Housing	Polycarbonate PC
Housing sealant	EPDM
M12 plug	Brass, gold, plastic
Cable screw connection	Polyamide PA 6
Cable screw connection sealant	TPE or CR (Neoprene)
Closing screw	Galvanised steel

2.9.2 Dimension drawings

All dimensions in mm unless otherwise stated

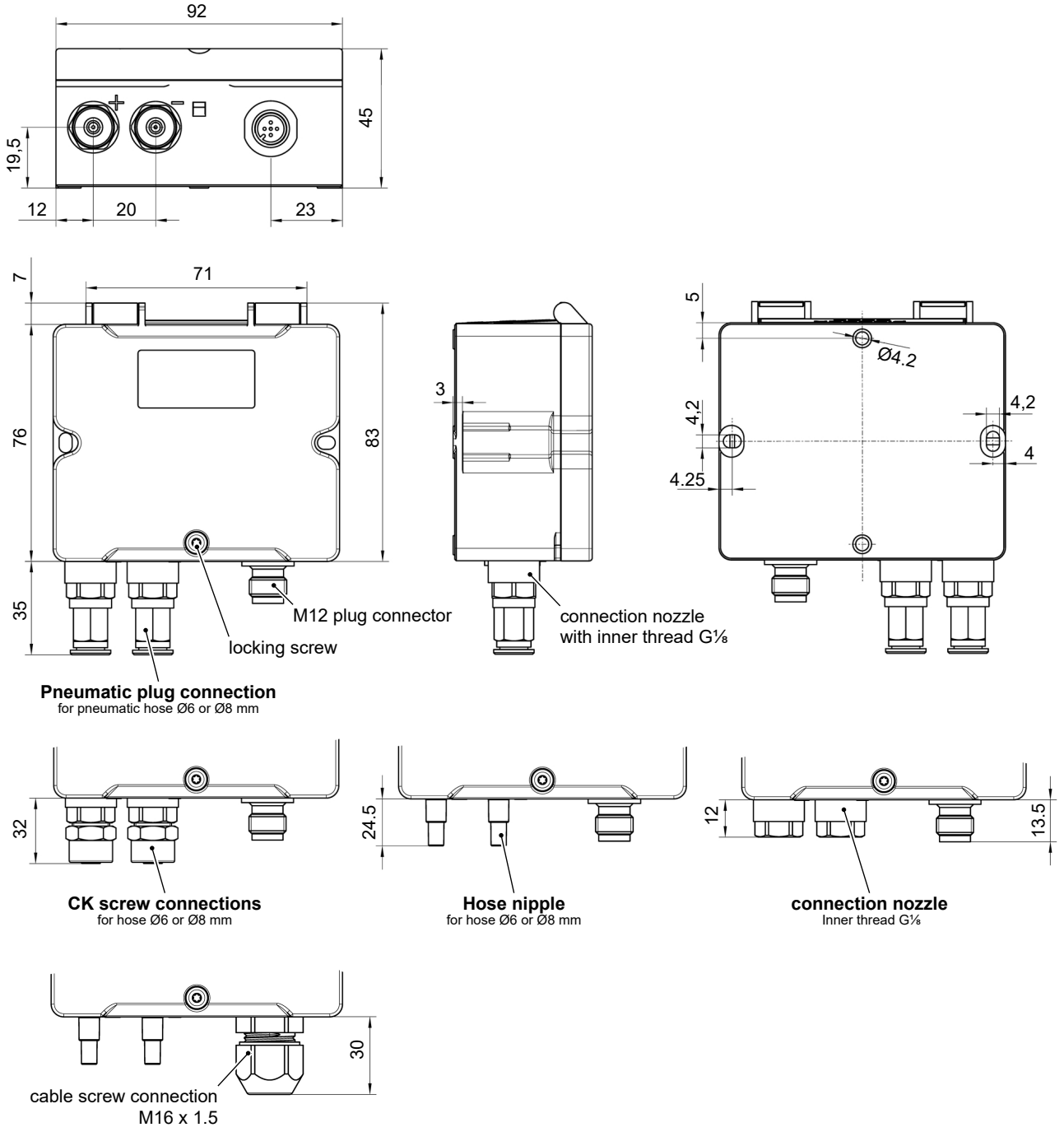

Fig. 4: Dimension drawing

3 Order codes

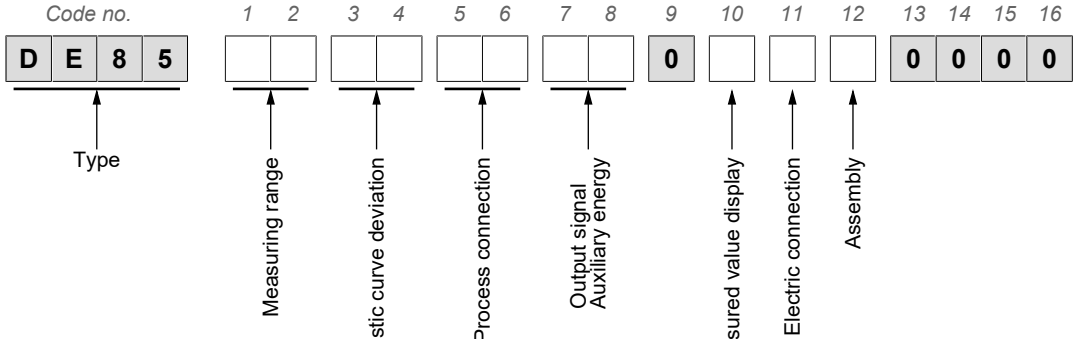

Measuring range:

The basic measuring range that is stated on the type plate is printed in bold.

[1.2]	[mbar]	[Pa]	[mbar]	[Pa]
C8	**-0.20 ... + 0.80**	**-20 ... + 80**	0 ... + 0.80	0 ... + 80
	+0.80 ... - 0.20	+80 ... - 20	---	---
A2	**-0.25 ... + 0.25**	**-25 ... + 25**	0 ... + 0.25	0 ... + 25
	+0.25 ... - 0.25	+25 ... - 25	0 ... - 0.25	0 ... - 25
A3	**-0.50 ... + 0.50**	**-50 ... + 50**	0 ... + 0.50	0 ... + 50
	+0.50 ... - 0.50	+50 ... - 50	0 ... - 0.50	0 ... - 50
C9	**-0.60 ... + 0.60**	**-60 ... + 60**	0 ... + 0.60	0 ... + 60
	+0.60 ... - 0.60	+60 ... - 60	0 ... - 0.60	0 ... - 60
A4	**-1.00 ... + 1.00**	**-100 ... + 100**	0 ... + 1.00	0 ... + 100
	+1.00 ... - 1.00	+100 ... - 100	0 ... - 1.00	0 ... - 100
A5	**-1.60 ... + 1.60**	**-160 ... + 160**	0 ... + 1.60	0 ... + 160
	+1.60 ... - 1.60	+160 ... - 160	0 ... - 1.60	0 ... - 160
A6	**-2.50 ... + 2.50**	**-250 ... + 250**	0 ... + 2.50	0 ... + 250
	+2.50 ... - 2.50	+250 ... - 250	0 ... - 2.50	0 ... - 250
A7	**-4.00 ... + 4.00**	**-400 ... + 400**	0 ... + 4.00	0 ... + 400
	+4.00 ... - 4.00	+400 ... - 400	0 ... - 4.00	0 ... - 400
J7	**-5.00 ... + 5.00**	**-500 ... + 500**	0 ... + 5.00	0 ... + 500
	+5.00 ... - 5.00	+500 ... - 500	0 ... - 5.00	0 ... - 500
A8	**-6.00 ... + 6.00**	**-600 ... + 600**	0 ... + 6.00	0 ... + 600
	+6.00 ... - 6.00	+600 ... - 600	0 ... - 6.00	0 ... - 600
A9	**-10.0 ... + 10.0**	**-1000 ... + 1000**	0 ... + 10.0	0 ... + 1000
	+10.0 ... - 10.0	+1000 ... - 1000	0 ... - 10.0	0 ... - 1000
B1	**-16.0 ... + 16.0**	**-1600 ... + 1600**	0 ... + 16.0	0 ... + 1600
	+16.0 ... - 16.0	+1600 ... - 1600	0 ... - 16.0	0 ... - 1600
B2	**-25.0 ... + 25.0**	**-2500 ... + 2500**	0 ... + 25.0	0 ... + 2500
	+25.0 ... - 25.0	+2500 ... - 2500	0 ... - 25.0	0 ... - 2500
C5	**-40.0 ... + 40.0**	**-4000 ... + 4000**	0 ... + 40.0	0 ... + 4000
	+40.0 ... - 40.0	+4000 ... - 4000	0 ... - 40.0	0 ... - 4000
C6	**-50.0 ... + 50.0**	**-5000 ... + 5000**	0 ... + 50.0	0 ... + 5000
	+50.0 ... - 50.0	+5000 ... - 5000	0 ... - 50.0	0 ... - 5000
B3	**-60.0 ... + 60.0**	**-6000 ... + 6000**	0 ... + 60.0	0 ... + 6000
	+60.0 ... - 60.0	+6000 ... - 6000	0 ... - 60.0	0 ... - 6000

[1.2]	[mbar]	[kPa]	[mbar]	[kPa]
B4	**-100 ... + 100**	**-10 ... + 10**	0 ... + 100	0 ... + 10
	+100 ... - 100	+10 ... - 10	0 ... - 100	0 ... - 10
B5	**-160 ... + 160**	**-16 ... + 16**	0 ... + 160	0 ... + 16
	+160 ... - 160	+16 ... - 16	0 ... - 160	0 ... - 16
B6	**-250 ... + 250**	**-25 ... + 25**	0 ... + 250	0 ... + 25
	+250 ... - 250	+25 ... - 25	0 ... - 250	0 ... - 25

Characteristic curve deviation:

[3.4]	[% FS]	Availability
1K	2.5 %	All measuring ranges
2M	1.0 %	Available measuring ranges - see technical data

Process connection:

[5.6]	
00	Connection nozzle with G⅛ inner thread
42	Plug nipple for 6/4 mm or 8/6 mm hose
40	CK screw connection in aluminium for 6/4 mm hose
41	CK screw connection in aluminium for 8/6 mm hose
P6	Nickel-plated brass pneumatic plug-in connector for 6/4 mm hose
P8	Nickel-plated brass pneumatic plug-in connector for 8/6 mm hose

Output signal - auxiliary energy:

[7.8]			Auxiliary energy	Type of connection
AL	0/4 … 20 mA, 0/2 … 10 V	Standard	24 V AC/DC	3-conductor
NL	0/4 … 20 mA, 0/2 … 10 V	limited according to NAMUR NE43	24 V AC/DC	3-conductor
B9	4 … 20 mA		24 V DC	2-conductor
ML	Modbus RTU, RS485		24 V AC/DC	3-conductor

Meas. data display:

[10]	
0	Without
C	LC display

Electrical connection:

[11]	
E	Cable screw connection
M	M12 plug connection

Assembly:

[12]	
W	Wall mounting
D	Assembly of the mounting rails (also enclosed)
S	Assembly of the mounting rails (pre-mounted)

3.1 Accessories

- **Assembly of the mounting rails**

Set for installing the device on a mounting rail consisting of:

- 2 x metal hat rail holders
- 2 x M4 attachment screw

Designation	Order no.
Assembly set for 35 mm mounting rail	06411698

- **M12 connection cables**

Designation	No. of poles	Length	Order no.
PUR connection cable with M12 connector	4 poles	2 m	06401993
		5 m	06401994
		10 m	06401572
	5 poles	2 m	06401995
		5 m	06401996
		10 m	06401573

- **Connection sets**

To connect the differential pressure transmitter to the ventilation channels.

Consisting of:

- 2 x PVC hose
- 2 x ABS weld socket incl. attachment screws.

Designation	Hose	Length	Order no.
Connection set	2 x 6/4 mm	2.5 m	04005148
	2 x 8/6 mm	2.5 m	04005224

Consisting of:

- 2 x PVC hose
- 2 x ABS weld socket incl. attachment screws
- 1 x prefabricated M12 plug connector 5-pin socket

Designation	Hose	Length	Order no.
Complete connection set	2 x 6/4 mm	1 m	06411696
	2 x 8/6 mm	1 m	06411697

- **Modbus**

Designation	Order no.
Terminating resistor Modbus; 120 ohm M12 socket	06411280
Terminating resistor Modbus; 120 ohm M12 plug	06411279
M12 distributor; T piece; unshielded	04451213
M12 distributor; Y piece; shielded	04451217

- **Spare parts**

Designation	Order no.
Locking screw	01001758

3.2 Information about the document

This document contains all technical data about the device. Great care was taken when compiling the texts and illustrations. nevertheless, errors cannot be ruled out.

Subject to technical amendments.

Notes

FISCHER Mess- und Regeltechnik GmbH
Bielefelder Str. 37a
D-32107 Bad Salzuflen
Tel. +49 5222 974-0
www.fischermesstechnik.de
info@fischermesstechnik.de

Technische Änderungen vorbehalten. Subject to technical changes. Sous réserve de modifications techniques.