ELECTROPROJECT
AN EQUANS COMPANY

developing solutions

FISCHER
MESS- UND REGELTECHNIK

Modbus

RoHS III COMPLIANT

UK CA

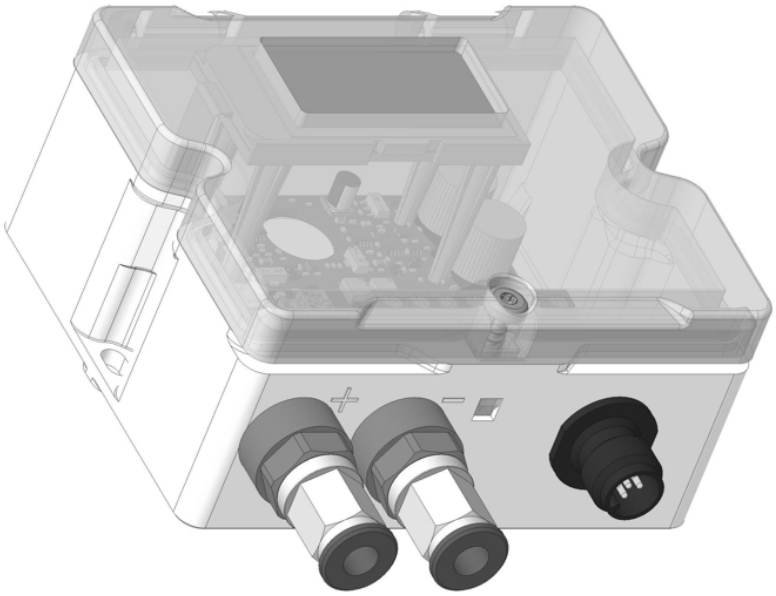

Operating manual

DE85

Differential pressure transmitter
ECO-LINE ®

for industrial applications

09015313 • BA_EN_DE85 • Rev. ST4-F • 12/25

Masthead

Manufacturer: **FISCHER Mess- und Regeltechnik GmbH**

Bielefelderstr. 37a
D-32107 Bad Salzuflen

Telephone: +49 5222 974 0
Telefax: +49 5222 7170

eMail: info@fischermesstechnik.de
web: www.fischermesstechnik.de

Technical editorial team: Technical editor: R. Kleemann

All rights, also those to the translation, reserved. No part of this document may be reproduced or processed, duplicated or distributed using electronic systems or any other form (print, photocopy, microfilm or another process) without the written consent of the company FISCHER Mess- und Regeltechnik GmbH, Bad Salzuflen.

Reproduction for internal use is expressly allowed.

Brand names and procedures are used for information purposes only and do not take the respective patent situation into account. Great care was taken when compiling the texts and illustrations. nevertheless, errors cannot be ruled out. The company FISCHER Mess- und Regeltechnik GmbH will not accept any legal responsibility or liability for this.

Subject to technical amendments.

© FISCHER Mess- und Regeltechnik 2022

Version history

Rev. ST4-A 06/21	Version 1 (first edition)
Rev. ST4-B 01/22	Version 2 (Modbus version added, UKCA)
Rev. ST4-C 04/23	Version 3 (screw plug; assembly updated)
Rev. ST4-D 06/24	Version 4 (analogue output NAMUR NE43 added)
Rev. ST4-E 03/25	Version 5 (Correction order code)
Rev. ST4-F 12/25	Version 6 (Interface: Add delivery status, Special properties)

Table of contents

1 Safety instructions ... 4
1.1 General ... 4
1.2 Personnel Qualification ... 4
1.3 Risks due to Non-Observance of Safety Instructions ... 4
1.4 Safety Instructions for the Operating Company and the Operator ... 4
1.5 Unauthorised Modification ... 4
1.6 Inadmissible Modes of Operation ... 4
1.7 Safe working practices for maintenance and installation work ... 5
1.8 Pictogram explanation ... 5
2 Product and functional description ... 6
2.1 Delivery scope ... 6
2.2 Intended use ... 6
2.3 Function diagram ... 6
2.4 Design and mode of operation ... 7
2.5 Equipment versions ... 7
3 Assembly ... 10
3.1 General ... 10
3.2 Process connection ... 11
3.3 Electrical connection ... 13
4 Start-up ... 15
4.1 General ... 15
4.2 Display ... 15
4.3 Config select ... 15
5 Servicing ... 21
5.1 Maintenance ... 21
5.2 Transport ... 21
5.3 Service ... 21
5.4 Disposal ... 21
6 Technical data ... 22
6.1 General ... 22
6.2 Input variables ... 22
6.3 Measuring accuracy ... 23
6.4 Output sizes ... 24
6.5 Digital interfaces ... 25
6.6 Auxiliary energy ... 25
6.7 Operating conditions ... 25
6.8 Display ... 25
6.9 Construction design ... 26
7 Order codes ... 28
7.1 Accessories ... 30
8 Attachment ... 31

1 Safety instructions

1.1 General

This operating manual contains basic instructions for the installation, operation and maintenance of the device that must be followed without fail. It must be read by the installer, the operator and the responsible specialist personnel before installing and commissioning the device.

This operating manual is an integral part of the product and therefore needs to be kept close to the instrument in a place that is accessible at all times to the responsible personnel.

The following sections, in particular instructions about the assembly, commissioning and maintenance, contain important information, non-observance of which could pose a threat to humans, animals, the environment and property.

The instrument described in these operating instructions is designed and manufactured in line with the state of the art and good engineering practice.

1.2 Personnel Qualification

The instrument may only be installed and commissioned by specialized personnel familiar with the installation, commissioning and operation of this product.

Specialized personnel are persons who can assess the work they have been assigned and recognize potential dangers by virtue of their specialized training, their skills and experience and their knowledge of the pertinent standards.

1.3 Risks due to Non-Observance of Safety Instructions

Non-observance of these safety instructions, the intended use of the device or the limit values given in the technical specifications can be hazardous or cause harm to persons, the environment or the plant itself.

The supplier of the equipment will not be liable for damage claims if this should happen.

1.4 Safety Instructions for the Operating Company and the Operator

The safety instructions governing correct operation of the instrument must be observed. The operating company must make them available to the installation, maintenance, inspection and operating personnel.

Dangers arising from electrical components, energy discharged by the medium, escaping medium and incorrect installation of the device must be eliminated. See the information in the applicable national and international regulations.

Please observe the information about certification and approvals in the Technical Data section.

1.5 Unauthorised Modification

Modifications of or other technical alterations to the instrument by the customer are not permitted. This also applies to replacement parts. Only the manufacturer is authorised to make any modifications or changes.

1.6 Inadmissible Modes of Operation

The operational safety of this instrument can only be guaranteed if it is used as intended. The instrument model must be suitable for the medium used in the system. The limit values given in the technical data may not be exceeded.

The manufacturer is not liable for damage resulting from improper or incorrect use.

1.7 Safe working practices for maintenance and installation work

The safety instructions given in this operating manual, any nationally applicable regulations on accident prevention and any of the operating company's internal work, operating and safety guidelines must be observed.

The operating company is responsible for ensuring that all required maintenance, inspection and installation work is carried out by qualified specialized personnel.

1.8 Pictogram explanation

⚠ DANGER

Type and source of danger

This indicates a **direct** dangerous situation that could lead to death or **serious injury** (highest danger level).

1. Avoid danger by observing the valid safety regulations.

⚠ WARNING

Type and source of danger

This indicates a **potentially** dangerous situation that could lead to death or **serious injury** (medium danger level).

1. Avoid danger by observing the valid safety regulations.

⚠ CAUTION

Type and source of danger

This indicates a **potentially** dangerous situation that could lead to slight or serious injury, damage or **environmental pollution** (low danger level).

1. Avoid danger by observing the valid safety regulations.

NOTICE

Note / advice

This indicates useful information of advice for efficient and smooth operation.

2 Product and functional description

2.1 Delivery scope

- Differential pressure transmitter DE85 ECO-LINE®
  version as stated on the type plate
- Operating Manual
- Closing screw for degree of protection IP65

2.2 Intended use

The DE85 is a differential pressure transmitter for industrial applications. It is suitable for measuring overpressure, under-pressure and differential pressure in neutral gaseous media.

The device may only be used for the purpose stipulated by the manufacturer. The manufacturer will not be liable for damage arising from incorrect or improper use.

WARNING! If the device is intended for outdoor use, we recommend using a suitable protective housing for permanent protection against UV radiation and as a protective measure against continuous rain and snowfall. A protective roof is not sufficient!

2.3 Function diagram

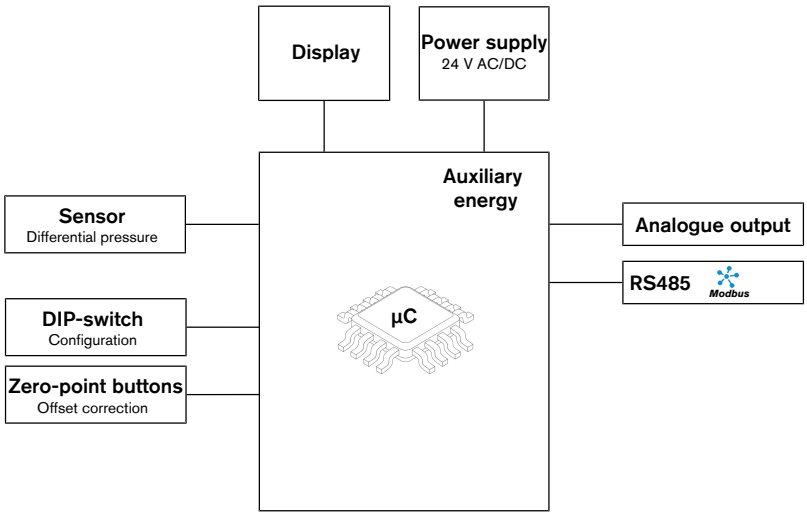

Fig. 1: Function diagram

2.4 Design and mode of operation

The device is based on a piezo-resistive sensor element that is suitable for measuring overpressure, under-pressure and differential pressure. The pressures to be compared have a direct effect on a silicon membrane equipped with a measuring bridge.

When the pressure is equal, the measuring membrane is in its idle state. If a pressure difference occurs, the membrane is deflected and a resistance change takes place on the attached measuring bridge. This change is evaluated by the device's electronics and transformed into the an analogue output signal with a rising or falling characteristic curve. The output signal can also be dampened and square rooted.

- Alternatively, the device is available as a 2-wire or Modbus RTU variant.
- All versions can be equipped with a full-graphic LC display.

In total, the device can be supplied in the following configurations.

	3-wire	2-wire	Modbus RTU
Analogue output 0/4 … 20 mA or 0/2 … 10 V, switchable	x		
Current loop 4 … 20 mA		x	
RS485 Modbus RTU			x
Options:			
Full graphic LC display	x	x	x

2.5 Equipment versions

The DE85 is differentiated into the version with 'with measurement value display' and 'without measurement value display'. Both versions are available as a 2-conductor as well as a 3-conductor version.

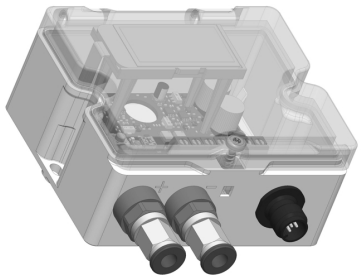

With measuring value display

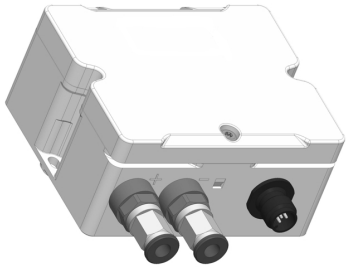

Without measuring value display

Fig. 2: Product summary

2.5.1 Connections

All combinations of process and electrical connection are available.

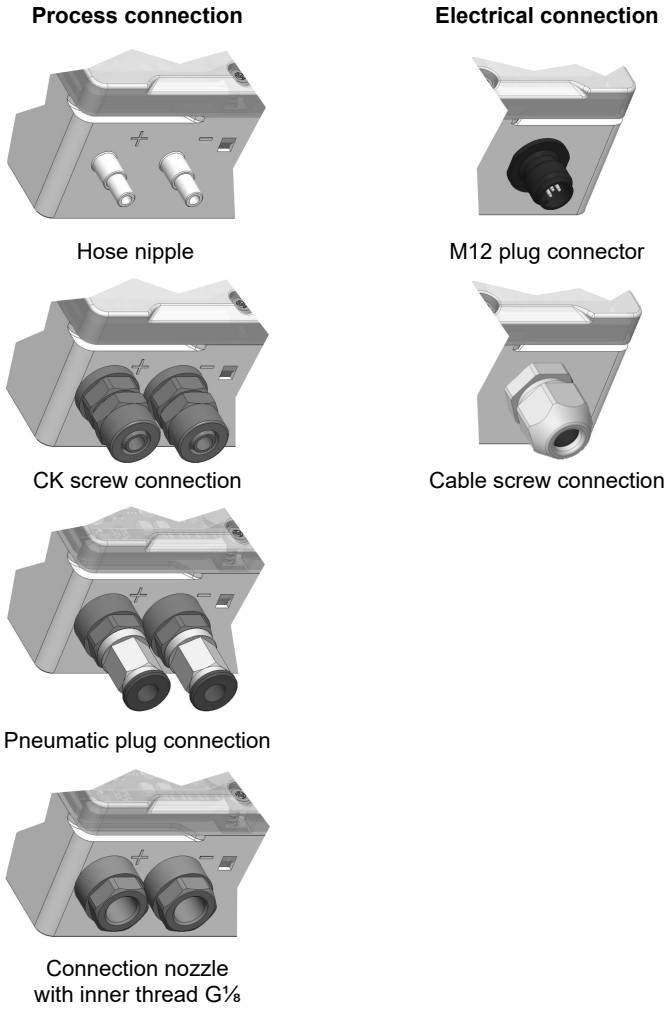

Fig. 3: Process and electrical connection

2.5.2 Type plate

The rating plate shown serves as an example of the information contained. For further information, please refer to the order code at the end of these instructions.

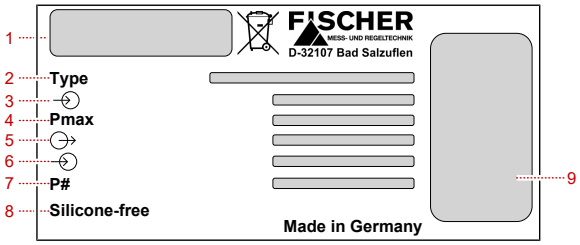

Fig. 4: Type plate

1	Conformity (CE, UKCA, etc.)	2	Device type (order code)
3	Basic measuring range	4	Overload capacity
5	Output signal (configurable)	6	Auxiliary voltage
7	Production number	8	Special properties
9	Circuit diagram		

→	Input
→	Output
Pmax	Proof Pressure
P#	Production No.

Fig. 5: Key

3 Assembly

3.1 General

The device is designed for mounting onto level walls and mounting plates. To this end, the device has two installation boreholes on the side. Alternatively, an installation test can be ordered for installing the mounting rail.

NOTICE! The locking screw is located in a plastic bag inside the device.

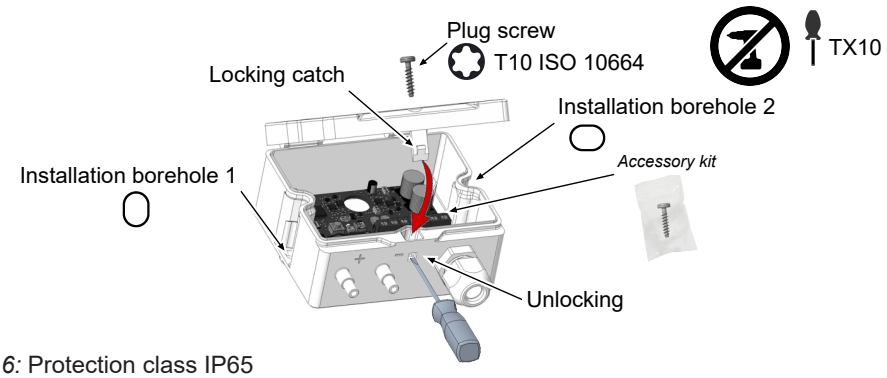

Fig. 6: Protection class IP65

(a) Open the housing

To open the housing, first remove the screw plug (if present). Then the housing can then be unlocked. To do this, use a suitable slotted screwdriver to press the locking lug at the designated point.

(b) Closing the housing

Close the cover until the latch clicks into place. Protection class IP54 is achieved with the snap-in connection alone.

NOTICE! The enclosed screw plug must be used to achieve IP65.

Please contact the manufacturer if the screw is missing. It is a special screw for thermoplastics. Protection class IP65 cannot be achieved with another screw as a replacement.

(c) Mounting the screw plug

The installation of the locking screw ensures that the release is blocked and the cover is held in position. It is a self-tapping screw for polycarbonate.

During installation (1), a screw-in torque [M_E] of maximum 1.2 Nm is required to form the thread and overcome the friction. Heat is generated during this process.

WARNING! Always mount the screw by hand. Do not use a cordless screwdriver.

As soon as the screw head is in contact (2), the installation is complete. Further tightening torque [M_A] to apply a pretensioning force is not necessary, as the function of the screw is already fulfilled in this position.

Please note that if the screw is turned further, the overtorque [$M_Ü$] will quickly be reached and the thread destroyed (3).

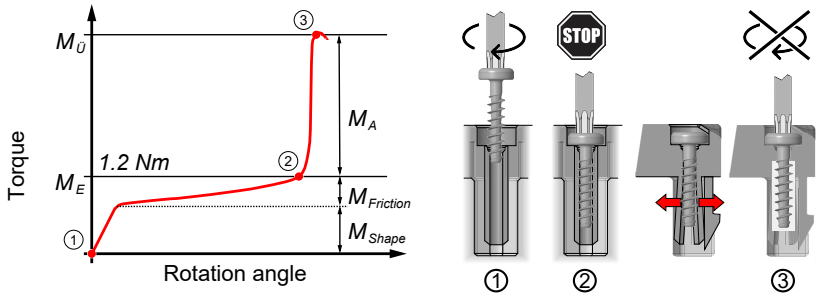

Fig. 7: Permissible torques

3.2 Process connection

- By authorized and qualified specialized personnel only.
- The pipes need to be depressurized when the instrument is being connected.
- Appropriate steps must be taken to protect the device from pressure surges.
- Check that the device is suitable for the medium being measured.
- Maximum pressures must be observed (cf. Tech. data)

The pressure lines must be kept as short as possible and installed without any tight bends to avoid delays.

The process connections are marked with (+) and (-) symbols on the device. The pressure lines must be mounted according to these symbols.

1. **Differential pressure measurement**
   ⊕ Higher pressure
   ⊖ lower pressure
2. **Pressure measurement**
   ⊕ Pressure
   ⊖ open

3.2.1 Assembly instructions

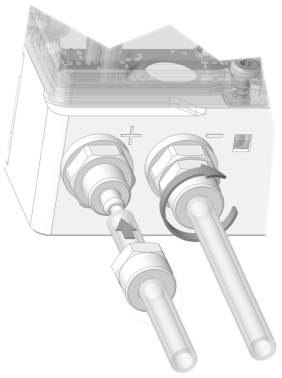

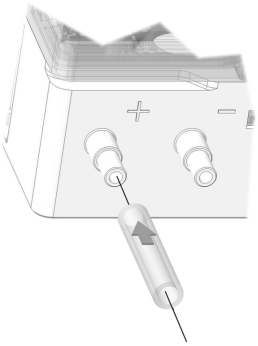

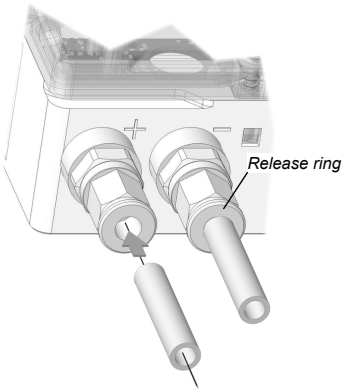

CK screw connection

Cut the hose at right angles and place the union nut onto the hose.

Place the hose onto the nipple.

Push the union nut up to the thread and tighten by hand (or with a tool).

The hose is clamped between the union nut and the cone of the nipple.

It is dismantled in reverse order.

Before using the hose again, remove the used end.

Plug nipple

Push the hose onto the nipple up to the stopper.

The plug nipple is designed for two hose sizes.

The hose is released by pulling it off the plug nipple.

Before using the hose again, remove the used end.

Pneumatic plug-in connection

Feed the hose through to the stopper

Ensure that the hose is inserted in the inner seal.

Possibly, contact with the seal can be interpreted as a stopper

The seal is released by pressing the release ring down and keeping it pressed down.

Carefully pull out the hose.

Before using the hose again, remove the used end

Connection nozzle with inner thread G1/8

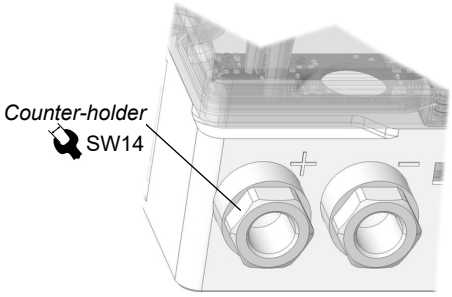

The process connection model allows cutting ring screw connections and also any other fittings with an 1/8 inch connection to be used.

Only install with a counter-holder.

3.3 Electrical connection

- By authorized and qualified specialized personnel only.
- When the device is connected, national and international electrotechnical regulations must be observed.
- Disconnect the system from the mains before electrically connecting the device.
- Do not connect the device when it is live.

Cable screw connection

Depending on the version, a 3-pin or 5-pin print terminal is fitted. All versions except Modbus have analogue output.

The data for the connection cable can be found in Construction design [▸ 26] the 'Technical Data' section.

Model	Print terminal
2-wire	3-pin
3-wire	3-pin
Modbus RTU (RS485)	5-pin

M12 plug

In the case of the versions with an M12 connector, this is connected to the print terminal block at the factory using a ready-made cable. Please refer to the following circuit diagrams for the connection assignment for the plug.

3.3.1 2-wire

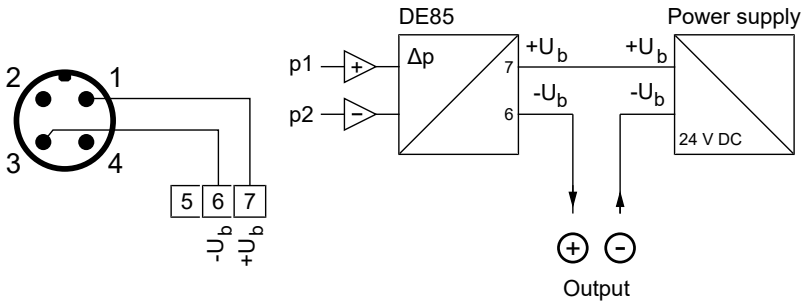

Fig. 8: Electrical connection 2-wire

3.3.2 3-wire

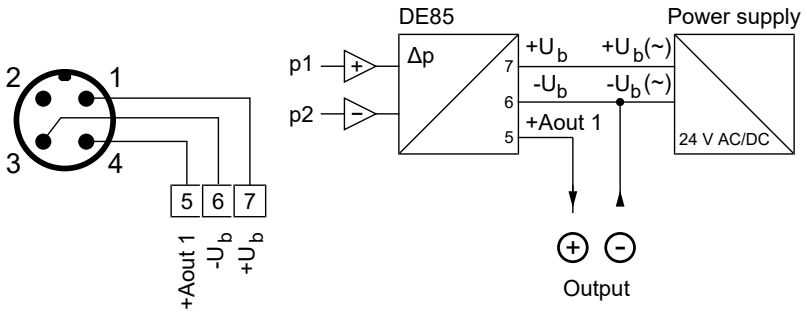

Fig. 9: Electrical connection 3-wire

3.3.3 Modbus

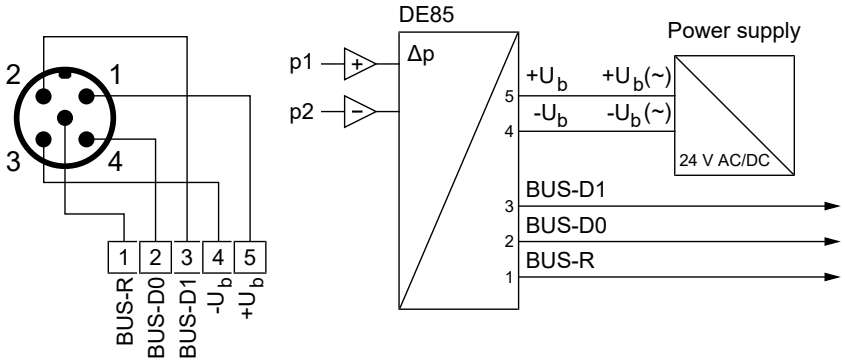

Fig. 10: Modbus electrical connection

Connection to an existing Modbus RTU network

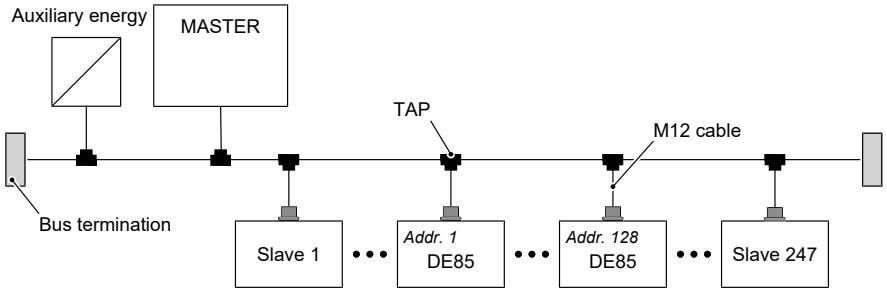

Fig. 11: Modbus RTU network

4 Start-up

4.1 General

All electrical supply, operating and measuring lines, and the pressure connections must have been correctly installed before commissioning. All supply lines are arranged so that there are no mechanical forces acting on the device.

Check that the pressure connections do not leak before commissioning.

4.2 Display

Optionally, the device can be delivered with a LC display. After switching on the auxiliary voltage, the current measured value appears on the display.

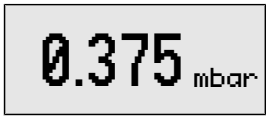

Fig. 12: Measuring data display

4.3 Config select

When configuring the DE85 devices, a distinction is made between devices with analog output and devices with Modbus.

4.3.1 Devices with analogue output

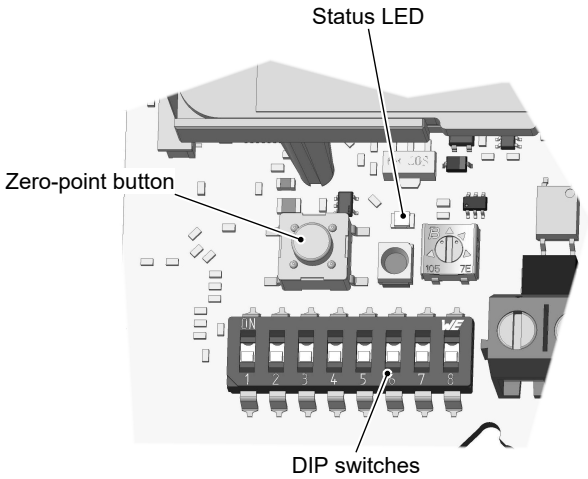

DIP switches

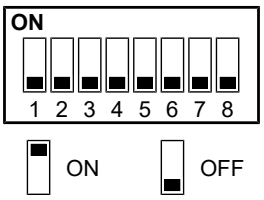

1 Measuring range characteristic curve
2 Measuring range symmetry
3 Output signal characteristic curve
4 Output signal current / voltage
5 Output signal offset zero-point
6 Output signal square rooted
7 Output signal/display damping
8 Display unit

Fig. 13: Control elements for configuration

4.3.1.1 Measuring range

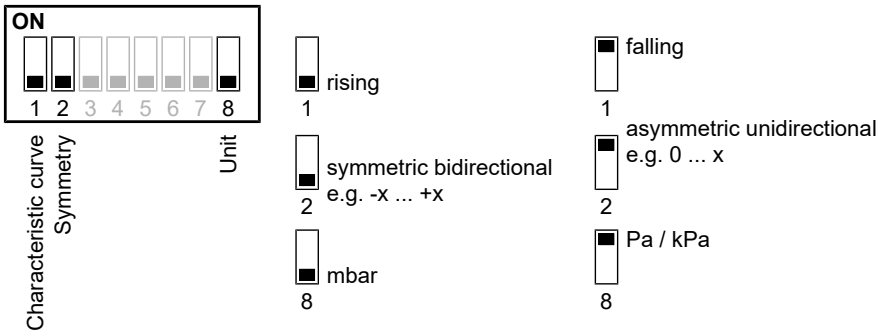

Fig. 14: Configuring measuring range

For example:

A device was ordered with the code A2 for the measuring range. When delivered, the device is set to the basic measuring range **-0.25 … +0.25 mbar**.

[1.2]	[mbar]	[Pa]	[mbar]	[Pa]
A2	-0.25 ... + 0.25	-25 ... + 25	0 ... + 0.25	0 ... + 25
	+0.25 ... - 0.25	+25 ... - 25	0 ... - 0.25	0 ... - 25

The following configuration options are available for this measuring range:

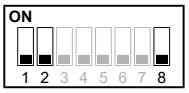

-0.25 ... +0.25 mbar

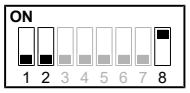

-25 ... +25 Pa

0 ... +0.25 mbar

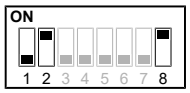

0 ... +25 Pa

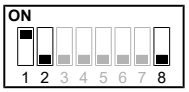

+0.25 ... -0.25 mbar

+25 ... -25 Pa

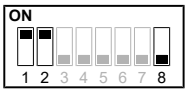

0 ... -0.25 mbar

0 ... -25 Pa

4.3.1.2 Output signal

- Damping affects the analogue output and display.
- In case of square rooting, the DIP switch 2 (symmetry) does not have a function. The measuring range is permanently set to ‘asymmetric unidirectional’ (0...x).

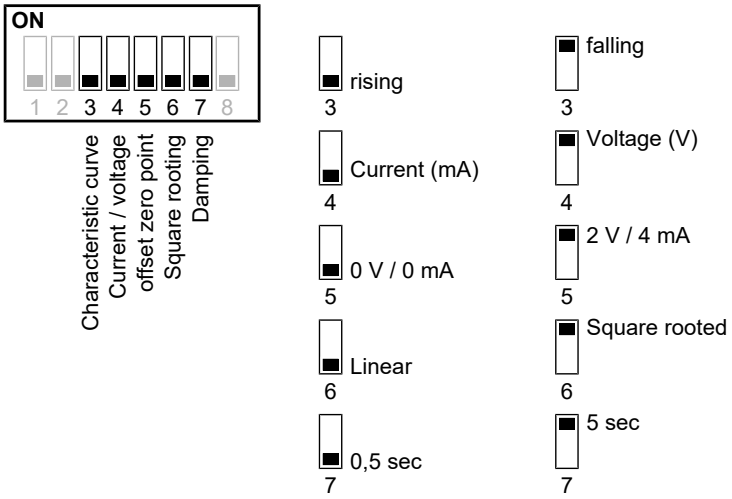

Fig. 15: Configure output signal

For example:

The analogue output should be configured as follows for a 3-wire device with a measuring range -25 … +25 Pa:

		DIP switches
Voltage output	2 … 10 V	4 & 5
Output characteristic curve	rising	3
Square rooting	Without	6
Damping	5 sec	7

The DIP switch is set at follows:

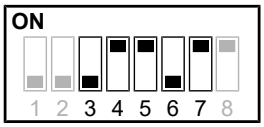

Please note that only an output signal of 4 … 20 mA is technically possible in a 2-wire device. Accordingly, the switches DIP4 and DIP5 have no function in this model.

Remarks:
Note:If the analogue output is in U operation, a short circuit at the output is indicated by the status LED (yellow) flashing continuously. However, an error in power operation cannot be displayed.

4.3.1.3 Zero point correction

In order to zero the measured value, the zero point button is actuated in the depressurized state. The yellow status LED flashes 1x long and 2x short as confirmation.

The zero-point correction can compensate an offset of up to 33% of the basic measuring range.

4.3.2 Device with Modbus

NOTICE! In this section you will learn how to configure a Modbus device. Further information can be found in the Modbus manual.

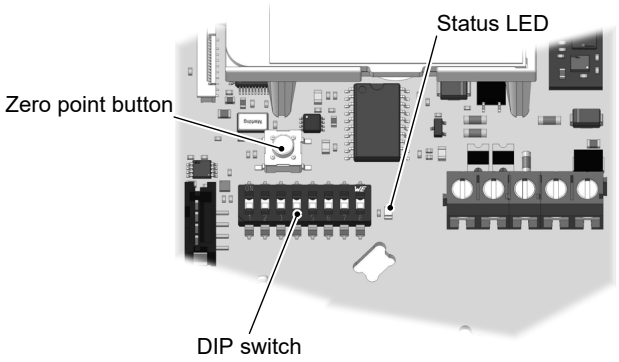

DIP switch

1–7	Address
8	Modbus address = OFF

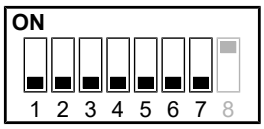

1–3	Baud rate
4–5	Parity
6	Stop bit
7	Byte order
8	Interface = ON

Delivery status

Address	1
Baud rate	19200
Parity	even
Stop bit	1
Byte order	MSB ... LSB

Fig. 16: Control elements for configuration

4.3.2.1 Modbus address

NOTICE! Address 0 is reserved for the broadcast. For this reason, a decimal 1 is added to each set address.

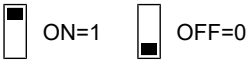

	S1	S2	S3	S4	S5	S6	S7	S8	Σ	Address
Binary	2^0	2^1	2^2	2^3	2^4	2^5	2^6			
Decimal	1 +	2 +	4 +	8 +	16 +	32 +	64		= 127	*Sum +1*
	0	0	0	0	0	0	0	0	*0*	***1***
	1	0	0	0	0	0	0	0	*1*	***2***
	0	1	0	0	0	0	0	0	*2*	***3***
				⋮						
	1	1	1	1	1	1	1	0	*127*	***128***

Fig. 17: Setting the Modbus address

4.3.2.2 Interface

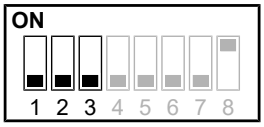

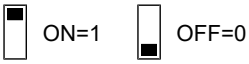

	S1	S2	S3	S8	Σ	Baud rate
Binary	2^0	2^1	2^2			
Decimal	1 +	2 +	4		= 7	
	0	0	0	1	*0*	***2400***
	1	0	0	1	*1*	***4800***
	0	1	0	1	*2*	***9600***
	1	1	0	1	*3*	***14400***
	0	0	1	1	*4*	***19200***
	1	0	1	1	*5*	***38400***
	0	1	1	1	*6*	***57600***
	1	1	1	1	*7*	***115200***

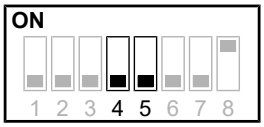

S4	S5	S8	Parity
0	0	1	***without***
1	0	1	***even***
0	1	1	***uneven***

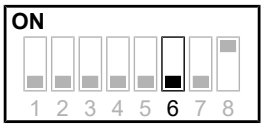

S6	S8	Stop bit
0	1	***1 Bit***
1	1	***2 Bits***

S7	S8	Byte order
0	1	***MSB ... LSB***
1	1	***LSB ... MSB***

Fig. 18: Configuring the interface

4.3.2.3 Description of functions

DIP switches

The Modbus is configured with the DIP switch.

There are two settings areas. They are divided into interface and address configurations. Switch S8 allows you to switch between the two setting areas.

As soon as the BUS configuration is changed using the DIP switches, an information window appears on the display (if available) with the currently set BUS configuration.

For complete configuration, the following procedure is recommended:

- First switch on the device and then set all DIP switches to the OFF position. Now use S1 to S7 to select the desired MODBUS address.
- Next, set switch S8 to ON. Now you can configure the baud rate, parity, number of stop bits and byte order.
- Moving each switch results in a configuration change. The configuration is saved after each change. If the operator changes the switch position while the device is switched off, this does not change the bus parameters.

Zero point button

In order to zero the measured value (zero point correction), the button is briefly pressed in the pressureless state. The yellow status LED flashes 1x long and 2x short as confirmation.

Zero point correction can compensate for an offset of up to 33% of the basic measuring range.

If the button is pressed for several seconds, an information window with the currently set BUS configuration appears on the display (if available).

Status LED

The status LED signals confirmation of the zero point correction.

It also flashes quickly and evenly when the device is sending data to the master via Modbus.

5 Servicing

5.1 Maintenance

The instrument is maintenance-free. We recommend the following regular inspection to guarantee reliable operation and a long service life:

- Check the function in combination with downstream components.
- Check the leak-tightness of the pressure connection lines.
- Check the electrical connections.

The exact test cycles need to be adapted to the operating and environmental conditions. In combination with other devices, the operating instructions for the other devices also need to be observed.

5.2 Transport

The measuring device must be protected against impacts. It should be transported in the original packaging or a suitable transport container.

5.3 Service

All defective or faulty devices should be sent directly to our repair department. Please coordinate all shipments with our sales department.

⚠ WARNING

Process media residues

Process media residues in and on dismantled devices can be a hazard to people, animals and the environment. Take adequate preventive measures. If required, the devices must be cleaned thoroughly.

Return the device in the original packaging or a suitable transport container.

5.4 Disposal

WEEE-Reg.-No. DE 31751293

Please help to protect our environment and dispose of the workpieces and packaging materials used in an environmentally friendly manner. Observe the country-specific waste treatment and disposal regulations.

The year of production can be found in the production number (serial number):

P# **23** 03618.03.123

Production year 2023

Further information on disposal can be found on our website [www.fischermesstechnik.de]

6 Technical data

6.1 General

Type designation	DE85	
Pressure type	Differential pressure	
Measurement principle	Piezo-resistive	
Special properties	Silicone-free	

Reference conditions (acc. to IEC 61298-1)		
Temperature	+15 to +25 °C	
Relative humidity	45 … 75 %	
Air pressure	86 to 106 kPa	860 to 1060 mbar
Installation position	vertical	

6.2 Input variables

Every measuring range is configured with the DIP switch as follows:

- Measuring range characteristic curve
  - rising (e.g. 0 … x)
  - falling (e.g. 0 … -x)
- Measuring range symmetry
  - Symmetric bidirectional (e.g –x … +x)
  - Asymmetric unidirectional (e.g. 0 … x)
- Unit in [mbar] or [Pa]

Measuring range	Overload	Bursting pressure
≤ -2.50 … 2.50 mbar / -250 … 250 Pa	700 mbar	1 bar
≤ -10.00 … 10.00 mbar / -1000 … 1000 Pa	100 mbar	200 mbar
≤ -40.00 … 40.00 mbar / -4000 … 4000 Pa	310 mbar	410 mbar
≤ -100.00 … 100.00 mbar / -10 … 10 kPa	800 mbar	1 bar
≤ -250.00 … 250.00 mbar / -25 … 25 kPa	1.4 bar	2.5 bar

6.3 Measuring accuracy

- Based on the reference temperature, the information only applies within the compensation range.
- The characteristic curve deviation contains linearity, hysteresis and non-repetitiveness.
- Compensation range: -20 … +70 °C.
- The information is provided for the rising measuring range characteristic curve. They also apply for the falling characteristic curve.

Characteristic curve deviation

				Characteristic curve dev. [%]			
Measurement range [mbar]		Measurement range [Pa]		Code 1K		Code 2M	
Start	End	Start	End	Typ.	Max.	Typ.	Max.
-0.20	**… 0.80**	**-20**	**… 80**	1.5	2.5	0.5	1.0
0	… 0.80	0	… 80			0.75	1.5
-0.25	**… 0.25**	**-25**	**… 25**			---	---
0	… 0.25	0	… 25			---	---
-0.50	**… 0.50**	**-50**	**… 50**			0.5	1.0
0	… 0.50	0	… 50			1.0	2.0
-0.60	**… 0.60**	**-60**	**… 60**			0.5	1.0
0	… 0.60	0	… 60			0.75	1.5

Measurement range [mbar]		Measurement range [Pa]		Characteristic curve dev. [%]			
				Code 1K		Code 2M	
Start	End	Start	End	Typ.	Max.	Typ.	Max.
-1.00	**... 1.00**	**-100**	**... 100**	1.5	2.5	0.5	1.0
0	… 1.00	0	… 100				
-1.60	**... 1.60**	**-160**	**... 160**				
0	… 1.60	0	... 160				
-2.50	**... 2.50**	**-250**	**... 250**				
0	… 2.50	0	... 250				
-4.00	**... 4.00**	**-400**	**... 400**				
0	… 4.00	0	... 400				
-5.00	**... 5.00**	**-500**	**... 500**				
0	… 5.00	0	... 500				
-6.00	**... 6.00**	**-600**	**... 600**				
0	… 6.00	0	... 600				
-10.0	**... 10.0**	**-1000**	**... 1000**				
0	… 10.0	0	... 1000				
-16.0	**... 16.0**	**-1600**	**... 1600**				
0	… 16.0	0	... 1600				
-25.0	**... 25.0**	**-2500**	**... 2500**				
0	… 25.0	0	... 2500				
-40.0	**... 40.0**	**-4000**	**... 4000**				
0	… 40.0	0	... 4000				
-50.0	**... 50.0**	**-5000**	**... 5000**				

Measurement range [mbar]		Measurement range [Pa]		Characteristic curve dev. [%]			
				Code 1K		Code 2M	
Start	End	Start	End	Typ.	Max.	Typ.	Max.
0	… 50.0	0	... 5000				
-60.0	**... 60.0**	**-6000**	**... 6000**				
0	… 60.0	0	... 6000				

Measurement range [mbar]		Measurement range [kPa]		Characteristic curve dev. [%]			
				Code 1K		Code 2M	
Start	End	Start	End	Typ.	Max.	Typ.	Max.
-100	**... 100**	**-10**	**... 10**	1.5	2.5	0.5	1.0
0	… 100	0	... 10				
-160	**... 160**	**-16**	**... 16**				
0	… 160	0	... 16				
-250	**... 250**	**-25**	**... 25**				
0	… 250	0	... 25				

Temperature coefficient

Measuring range limits			Tc-zero [%/10K]		TK span [%/10K]	
	mbar	Pa	Typ.	Max.	Typ.	Max.
	-0.25 … 0.25	-25 … 25	0.4	0.8	0.20	0.40
≤	-2.50 … 2.50	-250 … 250	0.3	0.6	0.20	0.40
≥	-4.00 … 4.00	-400 … 400	0.2	0.4	0.15	0.30

6.4 Output sizes

The DIP switch can be used can be configured between current and voltage output with a switchable live-zero, and between rising and falling characteristic curve.

The data for the rising characteristic curve are stated in the following. The data for the falling characteristic curve are identical.

Analogue output 3-conductor

Standard (Code: AL)

Output signal	**0 … 20 mA** **4 … 20 mA**	**0 … 10 V** **2 … 10 V**
Signal range	0.0 to 21.5 mA	0.0 to 10.5 V
Load impedance R_L	≤ 600 Ω	≥ 2 kΩ

NAMUR (Code: NL)

Output signal	**0 to 20 mA**	**4 … 20 mA**
Signal range	0.0 … 20.5 mA	3.8 … 20.5 mA
Load impedance R_L	≤ 600 Ω	
Error signal	21.5 mA	

Output signal	**0 … 10 V**	**2 … 10 V**
Signal range	0.0 to 10.5 V	1.8 … 10.5 V
Load impedance R_L	≥ 2 kΩ	
Error signal	10.75 V	

Analogue output 2-conductor

Standard (Code: B9)

Output signal	**4 … 20 mA**
Signal range	3.5 … 21.5 mA
Admissible resistance R_L	$R_L \leq (Ub – 7 V)/0.02 A$

6.5 Digital interfaces

Modbus RTU interface

interface	RS 485
Report	Modbus RTU
Modbus specification	Application Protocol Specification V1.1b3 (April 26, 2012)
Address	1 … 128
Baud rate	2400 … 115200 Baud
Parity	Even, uneven, parity
Stopbits	1…2

6.6 Auxiliary energy

3-conductor version | Modbus RTU

Nominal voltage	24 V AC/DC
Admissible operating voltage U_b	19.2 V … 28.8 V AC/DC
Power consumption	< 2 W

2-conductor version

Nominal voltage	24 V DC
Admissible operating voltage U_b	12 V … 28.8 V DC

6.7 Operating conditions

Ambient temperature range	-20 to +70 °C
Medium temperature range	-20 to +70 °C
Storage temperature range	-20 to +70 °C
Protection class	IP54 IP65 with enclosed screw plug
EMC	EN IEC 61326-1:2021 EN IEC 61326-2-3:2021 EN 60730-1:2016 + A1:2019
RoHS	EN IEC 63000:2018

6.8 Display

Display	Full graphic LC display
Resolution	128 x 64 Pixel
Back lighting	None
Meas. data display	Display format depends on the measuring range

6.9 Construction design

Process connection	Code	Hose	
		Outer Ø	Inner Ø
Connection nozzle with G⅛ inner thread	00	---	--
Plug nipple	42	6 mm	4 mm
		8 mm	6 mm
CK screw connection	40	6 mm	4 mm
	41	8 mm	6 mm
Pneumatic plug connector	P6	6 mm	4 mm
	P8	8 mm	6 mm

Electrical connection	2-wire	3-wire	Modbus RTU
Cable screw connection M16 x 1.5	Print terminal	Print terminal	Print terminal
	No. of poles 3	No. of poles 3	No. of poles 5
M12 plug connection	4-pin	4-pin	5-pin

Cable screw connection clamping area	5 mm to 10 mm
Fine-stranded conductor (with ferrule)	0.25 mm^2 to 1 mm^2
Single stranded conductor	0.34 mm^2 to 1.5 mm^2
Installation position	User-defined
Dimensions (without connections)	92 x 45 x 83
Weight	Max. 150 g

6.9.1 Materials

Materials of the parts that come into contact with the medium	
Plug nipple	Polycarbonate PC
CK screw connection	Aluminium anodised
Pneumatic plug connector	MS nickel-plated, NBR
Connection nozzle with G⅛ inner thread	Aluminium anodised
Sensor element	Silicon
Hoses	EPDM

Materials of the parts that come into contact with the surroundings	
Housing	Polycarbonate PC
Housing sealant	EPDM
M12 plug	Brass, gold, plastic
Cable screw connection	Polyamide PA 6
Cable screw connection sealant	TPE or CR (Neoprene)
Closing screw	Galvanised steel

6.9.2 Dimension drawings

All dimensions in mm unless otherwise stated

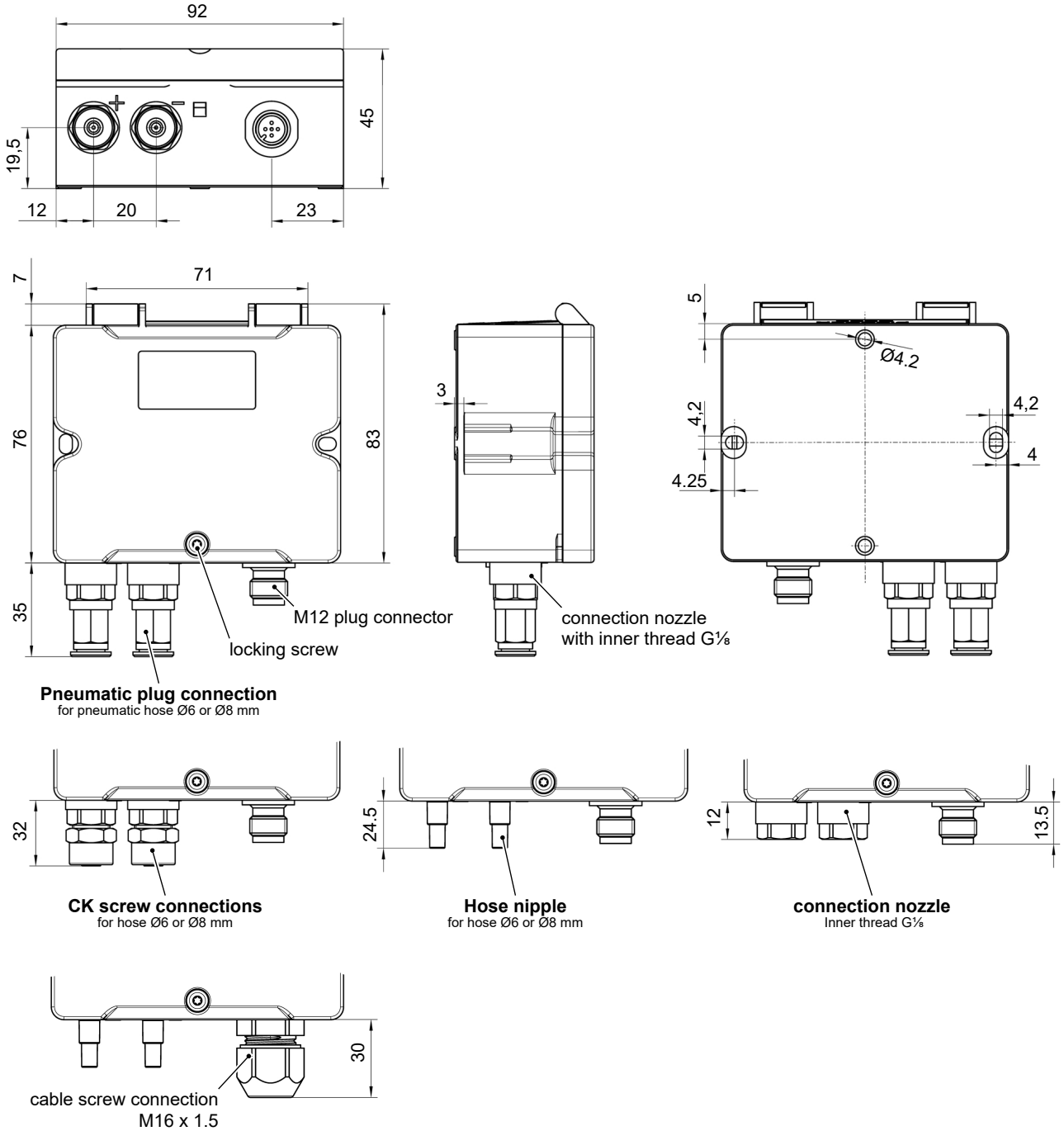

Fig. 19: Dimension drawing

7 Order codes

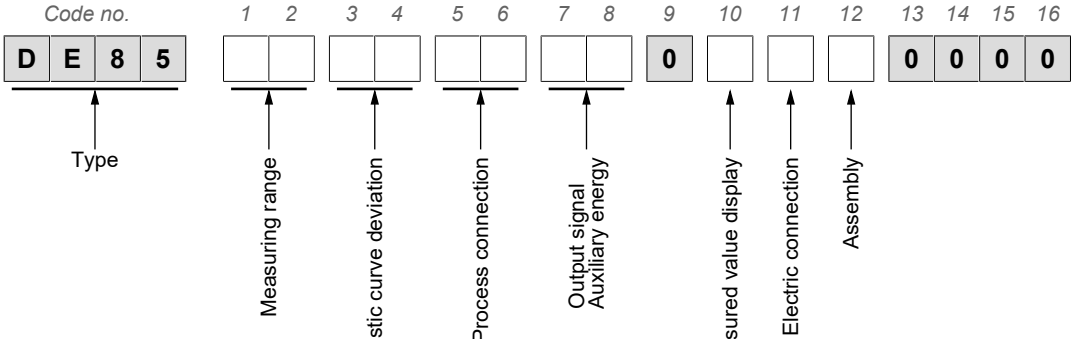

Measuring range:

The basic measuring range that is stated on the type plate is printed in bold.

[1.2]	[mbar]	[Pa]	[mbar]	[Pa]
C8	**-0.20 ... + 0.80**	**-20 ... + 80**	0 ... + 0.80	0 ... + 80
	+0.80 ... - 0.20	+80 ... - 20	---	---
A2	**-0.25 ... + 0.25**	**-25 ... + 25**	0 ... + 0.25	0 ... + 25
	+0.25 ... - 0.25	+25 ... - 25	0 ... - 0.25	0 ... - 25
A3	**-0.50 ... + 0.50**	**-50 ... + 50**	0 ... + 0.50	0 ... + 50
	+0.50 ... - 0.50	+50 ... - 50	0 ... - 0.50	0 ... - 50
C9	**-0.60 ... + 0.60**	**-60 ... + 60**	0 ... + 0.60	0 ... + 60
	+0.60 ... - 0.60	+60 ... - 60	0 ... - 0.60	0 ... - 60
A4	**-1.00 ... + 1.00**	**-100 ... + 100**	0 ... + 1.00	0 ... + 100
	+1.00 ... - 1.00	+100 ... - 100	0 ... - 1.00	0 ... - 100
A5	**-1.60 ... + 1.60**	**-160 ... + 160**	0 ... + 1.60	0 ... + 160
	+1.60 ... - 1.60	+160 ... - 160	0 ... - 1.60	0 ... - 160
A6	**-2.50 ... + 2.50**	**-250 ... + 250**	0 ... + 2.50	0 ... + 250
	+2.50 ... - 2.50	+250 ... - 250	0 ... - 2.50	0 ... - 250
A7	**-4.00 ... + 4.00**	**-400 ... + 400**	0 ... + 4.00	0 ... + 400
	+4.00 ... - 4.00	+400 ... - 400	0 ... - 4.00	0 ... - 400
J7	**-5.00 ... + 5.00**	**-500 ... + 500**	0 ... + 5.00	0 ... + 500
	+5.00 ... - 5.00	+500 ... - 500	0 ... - 5.00	0 ... - 500
A8	**-6.00 ... + 6.00**	**-600 ... + 600**	0 ... + 6.00	0 ... + 600
	+6.00 ... - 6.00	+600 ... - 600	0 ... - 6.00	0 ... - 600
A9	**-10.0 ... + 10.0**	**-1000 ... + 1000**	0 ... + 10.0	0 ... + 1000
	+10.0 ... - 10.0	+1000 ... - 1000	0 ... - 10.0	0 ... - 1000
B1	**-16.0 ... + 16.0**	**-1600 ... + 1600**	0 ... + 16.0	0 ... + 1600
	+16.0 ... - 16.0	+1600 ... - 1600	0 ... - 16.0	0 ... - 1600
B2	**-25.0 ... + 25.0**	**-2500 ... + 2500**	0 ... + 25.0	0 ... + 2500
	+25.0 ... - 25.0	+2500 ... - 2500	0 ... - 25.0	0 ... - 2500
C5	**-40.0 ... + 40.0**	**-4000 ... + 4000**	0 ... + 40.0	0 ... + 4000
	+40.0 ... - 40.0	+4000 ... - 4000	0 ... - 40.0	0 ... - 4000
C6	**-50.0 ... + 50.0**	**-5000 ... + 5000**	0 ... + 50.0	0 ... + 5000
	+50.0 ... - 50.0	+5000 ... - 5000	0 ... - 50.0	0 ... - 5000
B3	**-60.0 ... + 60.0**	**-6000 ... + 6000**	0 ... + 60.0	0 ... + 6000
	+60.0 ... - 60.0	+6000 ... - 6000	0 ... - 60.0	0 ... - 6000

[1.2]	[mbar]	[kPa]	[mbar]	[kPa]
B4	**-100 ... + 100**	**-10 ... + 10**	0 ... + 100	0 ... + 10
	+100 ... - 100	+10 ... - 10	0 ... - 100	0 ... - 10
B5	**-160 ... + 160**	**-16 ... + 16**	0 ... + 160	0 ... + 16
	+160 ... - 160	+16 ... - 16	0 ... - 160	0 ... - 16
B6	**-250 ... + 250**	**-25 ... + 25**	0 ... + 250	0 ... + 25
	+250 ... - 250	+25 ... - 25	0 ... - 250	0 ... - 25

Characteristic curve deviation:

[3.4]	[% FS]	Availability
1K	2.5 %	All measuring ranges
2M	1.0 %	Available measuring ranges - see technical data

Process connection:

[5.6]	
00	Connection nozzle with G⅛ inner thread
42	Plug nipple for 6/4 mm or 8/6 mm hose
40	CK screw connection in aluminium for 6/4 mm hose
41	CK screw connection in aluminium for 8/6 mm hose
P6	Nickel-plated brass pneumatic plug-in connector for 6/4 mm hose
P8	Nickel-plated brass pneumatic plug-in connector for 8/6 mm hose

Output signal - auxiliary energy:

[7.8]			Auxiliary energy	Type of connection
AL	0/4 … 20 mA, 0/2 … 10 V	Standard	24 V AC/DC	3-conductor
NL	0/4 … 20 mA, 0/2 … 10 V	limited according to NAMUR NE43	24 V AC/DC	3-conductor
B9	4 … 20 mA		24 V DC	2-conductor
ML	Modbus RTU, RS485		24 V AC/DC	3-conductor

Meas. data display:

[10]	
0	Without
C	LC display

Electrical connection:

[11]	
E	Cable screw connection
M	M12 plug connection

Assembly:

[12]	
W	Wall mounting
D	Assembly of the mounting rails (also enclosed)
S	Assembly of the mounting rails (pre-mounted)

7.1 Accessories

- **Assembly of the mounting rails**

Set for installing the device on a mounting rail consisting of:

- 2 x metal hat rail holders
- 2 x M4 attachment screw

Designation	Order no.
Assembly set for 35 mm mounting rail	06411698

- **M12 connection cables**

Designation	No. of poles	Length	Order no.
PUR connection cable with M12 connector	4 poles	2 m	06401993
		5 m	06401994
		10 m	06401572
	5 poles	2 m	06401995
		5 m	06401996
		10 m	06401573

- **Connection sets**

To connect the differential pressure transmitter to the ventilation channels.

Consisting of:

- 2 x PVC hose
- 2 x ABS weld socket incl. attachment screws.

Designation	Hose	Length	Order no.
Connection set	2 x 6/4 mm	2.5 m	04005148
	2 x 8/6 mm	2.5 m	04005224

Consisting of:

- 2 x PVC hose
- 2 x ABS weld socket incl. attachment screws
- 1 x prefabricated M12 plug connector 5-pin socket

Designation	Hose	Length	Order no.
Complete connection set	2 x 6/4 mm	1 m	06411696
	2 x 8/6 mm	1 m	06411697

- **Modbus**

Designation	Order no.
Terminating resistor Modbus; 120 ohm M12 socket	06411280
Terminating resistor Modbus; 120 ohm M12 plug	06411279
M12 distributor; T piece; unshielded	04451213
M12 distributor; Y piece; shielded	04451217

- **Spare parts**

Designation	Order no.
Locking screw	01001758

8 Attachment

FISCHER MESS- UND REGELTECHNIK

(Translation) CE

EU Declaration of Conformity

For the product described as follows

Product designation **Differential pressure transmitter**

Type designation **DE85**

it is hereby declared that it corresponds with the basic requirements specified in the following designated directives:

2014/30/EU	*EMC Directive*
2011/65/EU	*RoHS Directive*
(EU) 2015/863	*Delegated Directive amending Annex II to Directive 2011/65/EU*

The products were tested in compliance with the following standards.

Electromagnetic compatibility (EMC)

DIN EN IEC 61326-1:2022-11 *EN IEC 61326-1:2021*	*Electrical equipment for measurement, control and laboratory use - EMC requirements - Part 1: General requirement*
DIN EN IEC 61326-2-3:2022-11 *EN IEC 61326-2-3:2021*	*Electrical equipment for measurement, control and laboratory use - EMC requirements - Part 2-3: Particular requirements - Test configuration, operational conditions and performance criteria for transducers with integrated or remote signal conditioning*
DIN EN 60730-1:2021-06 *EN 60730-1:2016 + A1:2019*	*Automatic electrical controls - Part 1: General requirements*

RoHS Directive (RoHS 3)

DIN EN IEC 63000:2019-05 *EN IEC 63000:2018*	*Technical documentation for the assessment of electrical and electronic products with respect to the restriction of hazardous substances*

Also they were subjected to the conformity assessment procedure „**Internal production control**".

Sole responsibility for the issue of this declaration of conformity in relation to fulfilment of the fundamental requirements and the production of the technical documents is with the manufacturer.

Manufacturer

FISCHER Mess- und Regeltechnik GmbH
Bielefelder Str. 37a
32107 Bad Salzuflen, Germany

Tel. +49 (0)5222 974 0

The devices bear the following marking: CE

Bad Salzuflen
01 Apr 2025

T. Malischewski
Managing Director

09010463 • CE_EN_DE85 • Rev. ST4-B • 04/25 1 / 1

Fig. 20: CE_DE_DE85

FISCHER MESS- UND REGELTECHNIK

(Translation) UK CA

UKCA Declaration of Conformity

For the product described as follows

Product designation **Differential pressure transmitter**

Type designation **DE85**

is hereby declared to comply with the essential requirements, specified in the following UK regulations:

Statutory regulation No.	***Description***
2016 No. 1091	*The Electromagnetic Compatibility Regulations 2016*
2021 No. 422	*The Restriction of the Use of Certain Hazardous Substances in Electrical and Electronic Equipment (Amendment) Regulations 2021*
2022 No. 1647	*The Hazardous Substances and Packaging (Legislative Functions and Amendment) (EU Exit) Regulations 2020*

The products have been tested according to the following standards.

Electromagnetic compatibility (EMC):

BS EN IEC 61326-1:2021-06-07	*Electrical equipment for measurement, control and laboratory use. EMC requirements. General requirements*
BS EN IEC 61326-2-3:2021-06-10	*Electrical equipment for measurement, control and laboratory use. EMC requirements. Particular requirements. Test configuration, operational conditions and performance criteria for transducers with integrated or remote signal conditioning*
BS EN IEC 60730-1+A11:2024-11-04	*Automatic electrical controls for household and similar use. General requirements*

Restriction of Hazardous Substances (RoHS):

BS EN IEC 63000:2018-12-10	*Technical documentation for the assessment of electrical and electronic products with respect to the restriction of hazardous substances*

The sole responsibility for drawing up this declaration of conformity in relation to the fulfilment of the essential requirements and the preparation of the technical documentation lies with the manufacturer.

Manufacturer

FISCHER Mess- und Regeltechnik GmbH
Bielefelder Str. 37a
32107 Bad Salzuflen, Germany

Tel. +49 (0)5222 974 0

The devices bear the following marking: UK CA

Bad Salzuflen
01 Apr 2025

T. Malischewski
Managing Director

09010631 • UKCA_EN_DE85 • Rev. ST4-B • 04/25 1 / 1

Fig. 21: UKCA_DE_DE85

Notes

Notes

Notes

FISCHER Mess- und Regeltechnik GmbH
Bielefelder Str. 37a
D-32107 Bad Salzuflen
Tel. +49 5222 974-0
www.fischermesstechnik.de
info@fischermesstechnik.de

Technische Änderungen vorbehalten. Subject to technical changes. Sous réserve de modifications techniques.