developing solutions

ELECTROPROJECT
AN EQUANS COMPANY

FISCHER
MESS- UND REGELTECHNIK

CE

RoHS III COMPLIANT

UK CA

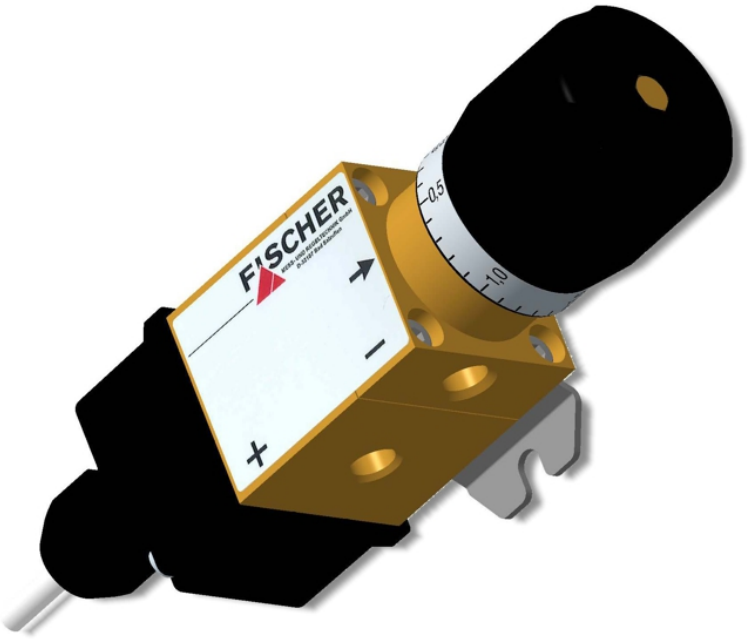

Data sheet

DS31

Differential pressure switch

09005414 • DB_EN_DS31 • Rev. ST4-D • 02/22

1 Product and functional description

1.1 Performance characteristics

Main features

- High repeat accuracy
- Long life span
- High overload protection

Typical applications

- Filter monitoring
- Water treatment plants
- Heating systems

Areas of application

- Filter equipment
- Plant engineering
- Machine construction

1.2 Product summary

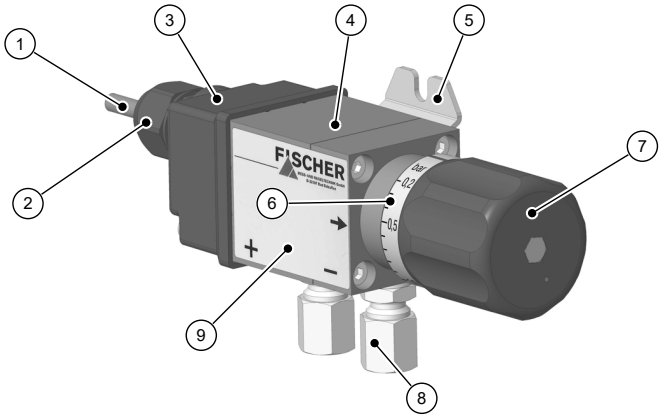

Fig. 1: Product summary

1	Connection cable	2	Cable screw connection
3	Cover hood	4	Pressure chamber
5	Mounting foot	6	Scale
7	Setting button	8	Cutting ring screw connection
9	Type plate		

1.2.1 Process connection

As standard, the device has a process connection G⅛ inch inner thread. However, the device can also be supplied with cutting ring screw connections for 6 or 8 mm tubes.

The maximum torque for the G⅛ inch inner thread is 5 Nm. The cutting ring screw connections may only be mounted with counter brackets (cf. operating instructions/assembly).

1.3 Intended use

The DS31 is a differential pressure switch for overpressure, underpressure and differential pressure measurements. The uncomplicated and durable membrane measuring mechanism is suitable for neutral fluid media, e.g. service water, heating water, neutral gases and oils.

1.4 Function diagram

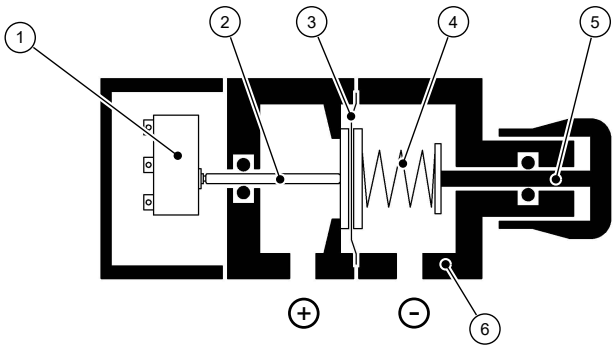

Fig. 2: Function diagram

1	Micro-switch	2	Switch tappet
3	Diaphragm	4	Measuring range spring
5	Adjustment spindle with setting button	6	Pressure chamber

1.5 Design and mode of operation

Due to the pressure or differential pressure to be measured, a one-sided force acts on the membrane. This force moves the membrane system against the pre-tensioned measuring range spring. A switch tappet mounted on the membrane actuates a micro switch.

The switch-point can be set with the setting button of the adjustment spindle. One scale and a setting mark attached to the type plate show the respectively set switch-point.

2 Technical data

2.1 General

Reference conditions (acc. to IEC 61298-1)		
Temperature	+15 to +25 °C	
Relative humidity	45 … 75 %	
Air pressure	86 to 106 kPa	860 to 1060 mbar
Installation position	User-defined	

2.2 Input variables

Measuring range	Switching range		Nominal pressure	Bursting pressure
	10 … 100%	*SI unit*		
0 to 400 mbar	40 to 400 mbar	4 to 40 kPa	PN16	64 bar
0 to 0.6 bar	0.06 to 0.6 bar	6 to 60 kPa		
0 to 1 bar	0.10 to 1.0 bar	10 to 100 kPa		
0 to 1.6 bar	0.16 to 1.6 bar	16 to 160 kPa		
0 to 2.5 bar	0.25 to 2.5 bar	25 to 250 kPa		
0 to 4 bar	0.40 to 4.0 bar	40 to 400 kPa		
0 to 6 bar	0.60 to 6.0 bar	60 to 600 kPa		

2.3 Output parameters

Micro-switch	AC	DC
Max. switching voltage	250 V	30 V
Max. switching current	3 A	0.4 A
Min. switching current	0.1A	0.1A
Max. switching output	250 VA	10 W
Mech. life span	10^6 switching cycles	

2.4 Measuring accuracy

Switch point switching range	10 … 100 % of the measuring range
Switch point accuracy	3% of the switching range
Hysteresis	5% of the switching range

2.5 Electrical connection

Hard-wired, silicone and halogen-free number cable

Core number	2 + PE
Conductor nominal cross-section	0.75 mm^2
AWG	19
Outer diameter	7.1 mm

Cable screw connection without cables

Internal connection terminal	2
Earthing	Connection screw for M4 ring cable lug
Conductor nominal cross-section	1 … 2.5 mm^2
Cable screw connection	M16x1.5
Terminal range	5.0 … 10 mm

2.6 Operating conditions

Ambient temperature range	-10 to +70 °C
Storage temperature range	-10 to +80 °C
Medium temperature range (for non-freezing media)	-10 to +80 °C
Low-Voltage Directive	EN 61010-1:2010 +A1:2019+A1:2019/ AC2019
RoHS	EN IEC 63000:2018
Protection class	IP 65 acc. to EN 60529
Materials of the parts that come into contact with the surroundings	
Lid, setting button	POM
Pressure chamber	CW614N
Cable screw connection	Polyamide
Connection cable	PVC halogen-free, flame-retardant
Mounting foot	Galvanised steel and passivated
Materials of the parts that come into contact with the measuring medium	
Pressure chamber	CW614N
O-rings and membrane	Stainless steel 1.431 NBR or FKM (acc. to order key)
Adjustment spindle, membrane plate	CW614N
Switch fields	1.4310
Other parts	CW614N, PTFE

2.7 Construction design

All dimensions in mm unless otherwise stated

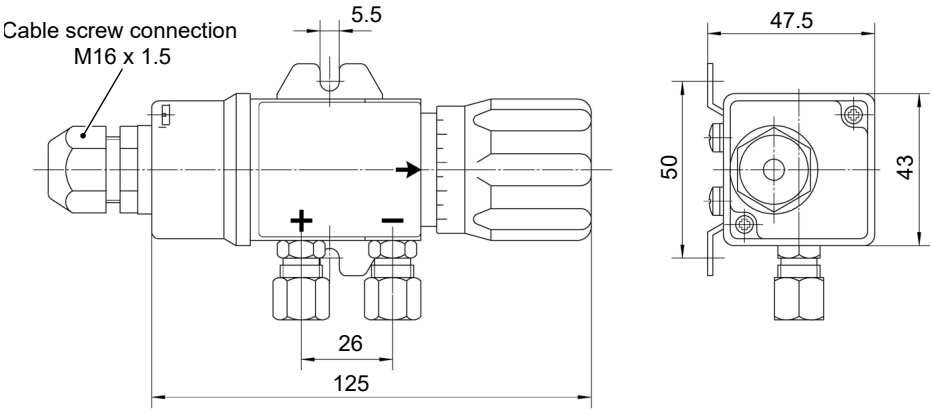

Fig. 3: Dimension drawing

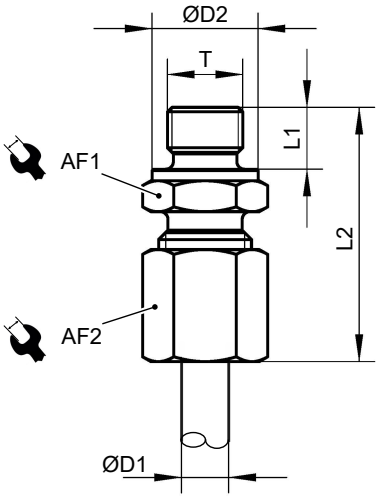

Fig. 4: Cutting ring screw connection

D	ØD1	ØD2	L1	L2	A/F 1	A/F 2
G⅛	6 mm	14 mm	8 mm	23.5 mm	14 mm	14 mm
G⅛	8 mm	14 mm	8 mm	24.5 mm	14 mm	17 mm

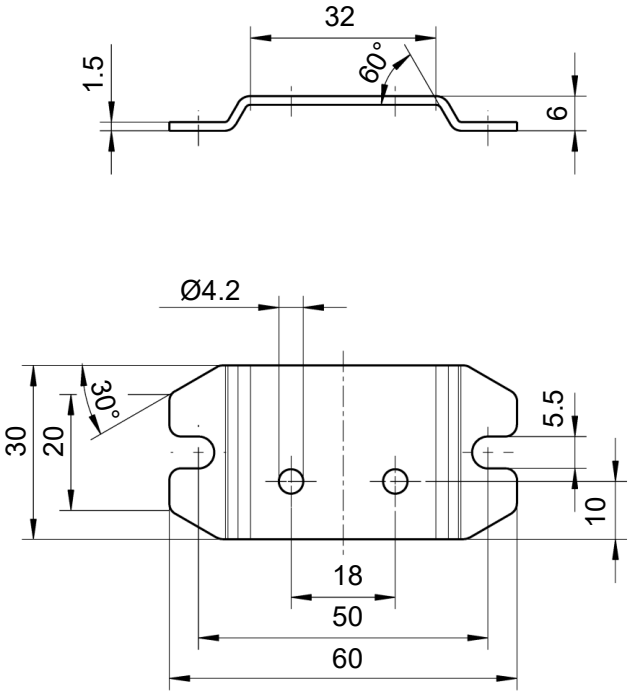

Fig. 5: Mounting foot

3 Order codes

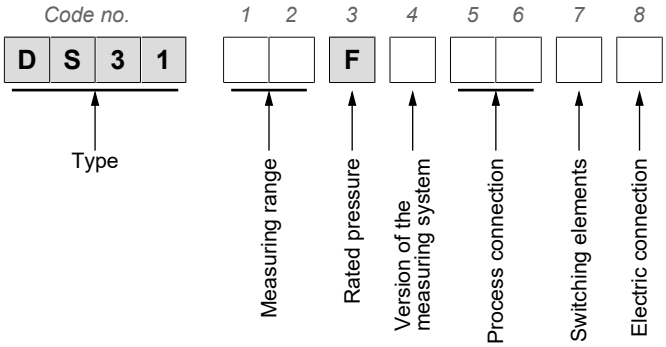

[1.2]	Measuring range	Switching range
83	0 to 400 mbar	40 to 400 mbar
01	0 to 0.6 bar	0.06 to 0.6 bar
02	0 to 1 bar	0.10 to 1.0 bar
03	0 to 1.6 bar	0.16 to 1.6 bar
04	0 to 2.5 bar	0.25 to 2.5 bar
05	0 to 4 bar	0.40 to 4.0 bar
06	0 to 6 bar	0.60 to 6.0 bar

[3]	Nominal pressure
F	PN16

[4]	Measuring system	
M	Pressure chamber: brass	Seals: NBR
N	Pressure chamber: brass	Seals: Viton

[5.6]	Process connection	
00	Inner thread G⅛	
20	Cutting ring connection in brass for 6 mm pipe	Material steel
21	Cutting ring connection in brass for 8 mm pipe	Material steel
28	Cutting ring connection in brass for 6 mm pipe	Material: brass
29	Cutting ring connection in brass for 8 mm pipe	Material: brass

[7]	Switching Elements	
A	1 adjustable micro-switch	Function: NO contact
B	1 adjustable micro-switch	Function: NC contact

[8]	Electrical connection
0	M16 Cable screw connection without cables
1	1.0 m long number cable, hard-wired
2	2.5 m long number cable, hard-wired
5	5.0 m long number cable, hard-wired

3.1 Information about the document

This document contains all technical data about the device. Great care was taken when compiling the texts and illustrations. nevertheless, errors cannot be ruled out.

Subject to technical amendments.

FISCHER Mess- und Regeltechnik GmbH
Bielefelder Str. 37a
D-32107 Bad Salzuflen

Tel. +49 5222 974-0
Fax +49 5222 7170
www.fischermesstechnik.de
info@fischermesstechnik.de

Technische Änderungen vorbehalten. Subject to technical changes. Sous réserve de modifications techniques.