ELECTROPROJECT
AN EQUANS COMPANY

developing solutions

FISCHER
MESS- UND REGELTECHNIK

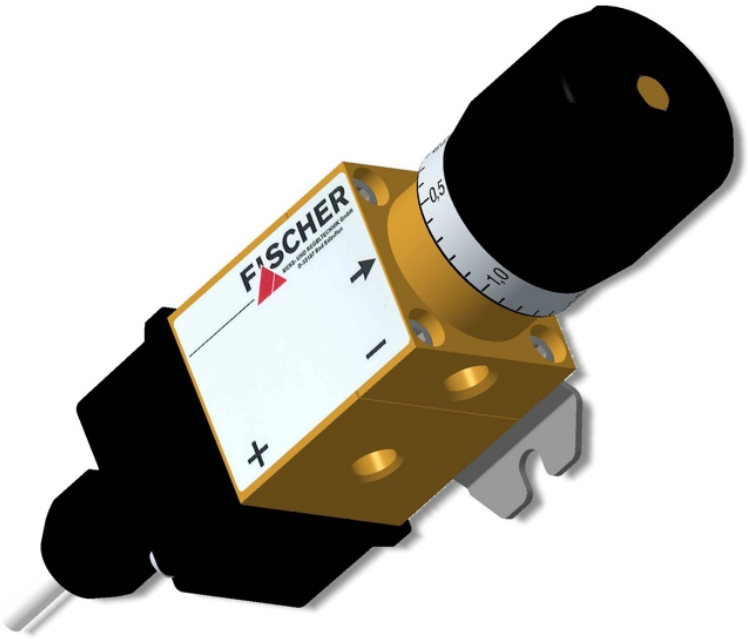

Operating manual

DS31

Differential pressure switch

09005344 • BA_EN_DS31 • Rev. ST4-D • 02/22

Masthead

Manufacturer: **FISCHER Mess- und Regeltechnik GmbH**

Bielefelderstr. 37a
D-32107 Bad Salzuflen

Telephone: +49 5222 974 0
Telefax: +49 5222 7170

eMail: info@fischermesstechnik.de
web: www.fischermesstechnik.de

Technical editorial team: Documentation representative: T. Malischewski
Technical editor: R. Kleemann

All rights, also those to the translation, reserved. No part of this document may be reproduced or processed, duplicated or distributed using electronic systems or any other form (print, photocopy, microfilm or another process) without the written consent of the company FISCHER Mess- und Regeltechnik GmbH, Bad Salzuflen.

Reproduction for internal use is expressly allowed.

Brand names and procedures are used for information purposes only and do not take the respective patent situation into account. Great care was taken when compiling the texts and illustrations; Nevertheless, errors cannot be ruled out. The company FISCHER Mess- und Regeltechnik GmbH will not accept any legal responsibility or liability for this.

Subject to technical amendments.

© FISCHER Mess- und Regeltechnik 2020

Version history

Rev. ST4-A 08/20	Version 1 (first edition)
Rev. ST4-B 06/21	Version 2 (CE declaration updated)
Rev. ST4-C 07/21	Version 3 (order code/electrical connection corrected)
Rev. ST4-D 02/22	Version 4 (UKCA, Switching range instead of adjustment range)

Table of contents

1 Safety instructions ... 4
1.1 General ... 4
1.2 Personnel Qualification ... 4
1.3 Risks due to Non-Observance of Safety Instructions ... 4
1.4 Safety Instructions for the Operating Company and the Operator ... 4
1.5 Unauthorised Modification ... 4
1.6 Inadmissible Modes of Operation ... 4
1.7 Safe working practices for maintenance and installation work ... 5
1.8 Pictogram explanation ... 5
2 Product and functional description ... 6
2.1 Delivery scope ... 6
2.2 Design and mode of operation ... 6
2.3 Intended use ... 6
2.4 Function diagram ... 6
2.5 Product summary ... 7
3 Assembly ... 8
3.1 General ... 8
3.2 Process connection ... 8
3.3 Electrical connections ... 9
4 Start-up ... 11
4.1 General ... 11
4.2 Switching point setting ... 11
5 Servicing ... 12
5.1 Maintenance ... 12
5.2 Transport ... 12
5.3 Service ... 12
5.4 Disposal ... 12
6 Technical data ... 13
6.1 General ... 13
6.2 Input variables ... 13
6.3 Output parameters ... 13
6.4 Measuring accuracy ... 13
6.5 Electrical connection ... 13
6.6 Operating conditions ... 14
6.7 Construction design ... 14
7 Order codes ... 16
8 Attachment ... 17

1 Safety instructions

1.1 General

This operating manual contains basic instructions for the installation, operation and maintenance of the device that must be followed without fail. It must be read by the installer, the operator and the responsible specialist personnel before installing and commissioning the device.

This operating manual is an integral part of the product and therefore needs to be kept close to the instrument in a place that is accessible at all times to the responsible personnel.

The following sections, in particular instructions about the assembly, commissioning and maintenance, contain important information, non-observance of which could pose a threat to humans, animals, the environment and property.

The instrument described in these operating instructions is designed and manufactured in line with the state of the art and good engineering practice.

1.2 Personnel Qualification

The instrument may only be installed and commissioned by specialized personnel familiar with the installation, commissioning and operation of this product.

Specialized personnel are persons who can assess the work they have been assigned and recognize potential dangers by virtue of their specialized training, their skills and experience and their knowledge of the pertinent standards.

1.3 Risks due to Non-Observance of Safety Instructions

Non-observance of these safety instructions, the intended use of the device or the limit values given in the technical specifications can be hazardous or cause harm to persons, the environment or the plant itself.

The supplier of the equipment will not be liable for damage claims if this should happen.

1.4 Safety Instructions for the Operating Company and the Operator

The safety instructions governing correct operation of the instrument must be observed. The operating company must make them available to the installation, maintenance, inspection and operating personnel.

Dangers arising from electrical components, energy discharged by the medium, escaping medium and incorrect installation of the device must be eliminated. See the information in the applicable national and international regulations.

Please observe the information about certification and approvals in the Technical Data section.

1.5 Unauthorised Modification

Modifications of or other technical alterations to the instrument by the customer are not permitted. This also applies to replacement parts. Only the manufacturer is authorised to make any modifications or changes.

1.6 Inadmissible Modes of Operation

The operational safety of this instrument can only be guaranteed if it is used as intended. The instrument model must be suitable for the medium used in the system. The limit values given in the technical data may not be exceeded.

The manufacturer is not liable for damage resulting from improper or incorrect use.

1.7 Safe working practices for maintenance and installation work

The safety instructions given in this operating manual, any nationally applicable regulations on accident prevention and any of the operating company's internal work, operating and safety guidelines must be observed.

The operating company is responsible for ensuring that all required maintenance, inspection and installation work is carried out by qualified specialized personnel.

1.8 Pictogram explanation

⚠ DANGER

Type and source of danger

This indicates a **direct** dangerous situation that could lead to death or **serious injury** (highest danger level).

1. Avoid danger by observing the valid safety regulations.

⚠ WARNING

Type and source of danger

This indicates a **potentially** dangerous situation that could lead to death or **serious injury** (medium danger level).

1. Avoid danger by observing the valid safety regulations.

⚠ CAUTION

Type and source of danger

This indicates a **potentially** dangerous situation that could lead to slight or serious injury, damage or **environmental pollution** (low danger level).

1. Avoid danger by observing the valid safety regulations.

NOTICE

Note / advice

This indicates useful information of advice for efficient and smooth operation.

2 Product and functional description

2.1 Delivery scope

- DS31 Differential pressure switch
- Operating Manual

2.2 Design and mode of operation

Due to the pressure or differential pressure to be measured, a one-sided force acts on the membrane. This force moves the membrane system against the pre-tensioned measuring range spring. A switch tappet mounted on the membrane actuates a micro switch.

The switch-point can be set with the setting button of the adjustment spindle. One scale and a setting mark attached to the type plate show the respectively set switch-point.

2.3 Intended use

The DS31 is a differential pressure switch for overpressure, underpressure and differential pressure measurements. The uncomplicated and durable membrane measuring mechanism is suitable for neutral fluid media, e.g. service water, heating water, neutral gases and oils.

2.4 Function diagram

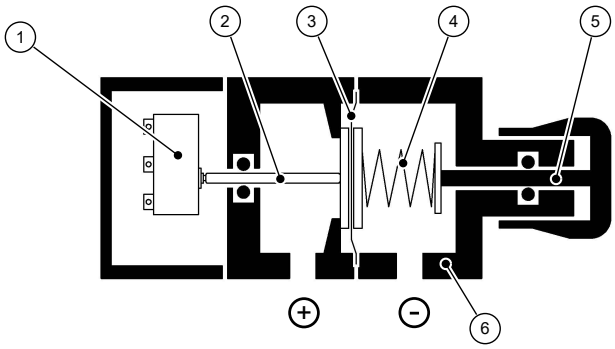

Fig. 1: Function diagram

1	Micro-switch	2	Switch tappet
3	Diaphragm	4	Measuring range spring
5	Adjustment spindle with setting button	6	Pressure chamber

2.5 Product summary

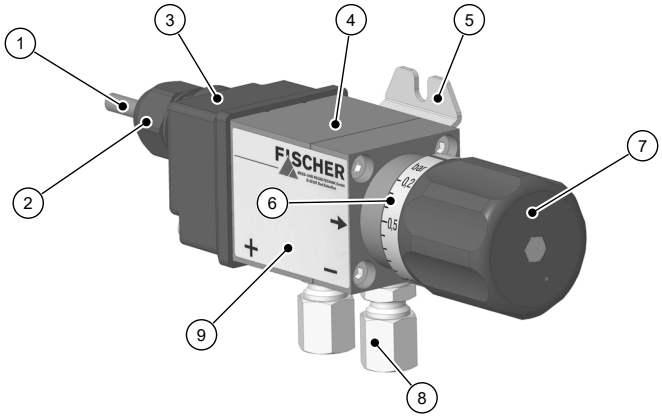

Fig. 2: Product summary

1	Connection cable	2	Cable screw connection
3	Cover hood	4	Pressure chamber
5	Mounting foot	6	Scale
7	Setting button	8	Cutting ring screw connection
9	Type plate		

2.5.1 Process connection

As standard, the device has a process connection G⅛ inch inner thread. However, the device can also be supplied with cutting ring screw connections for 6 or 8 mm tubes.

The maximum torque for the G⅛ inch inner thread is 5 Nm. The cutting ring screw connections may only be mounted with counter brackets (cf. operating instructions/assembly).

2.5.2 Type plate

This type plate serves as an example of the information that is stated. The data shown is purely fictive, but does correspond to the actual conditions. For more information, please see the order code at the end of these instructions.

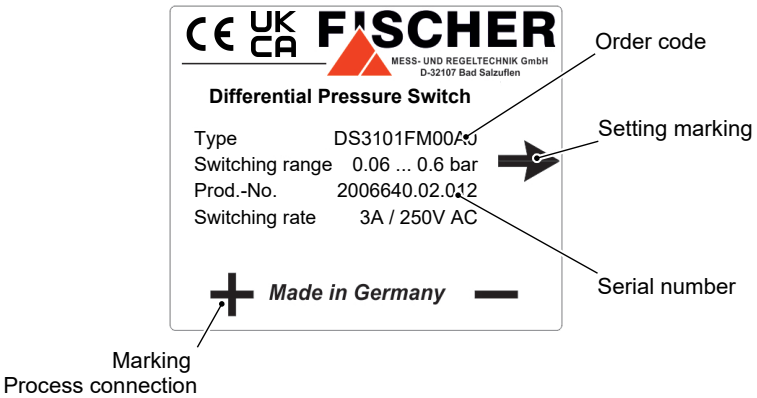

Fig. 3: Type plate

3 Assembly

3.1 General

The device is intended for installation on flat walls and mounting plates. The device has a mounting foot for screwing to the mounting plate.

3.2 Process connection

- By authorized and qualified specialized personnel only.
- The pipes need to be depressurized when the instrument is being connected.
- Appropriate steps must be taken to protect the device from pressure surges.
- Check that the device is suitable for the medium being measured.
- Maximum pressures must be observed (cf. Tech. data)

The pressure lines must be installed at an inclination so that when fluids are measured no air pockets are created or when measuring gases, no water pockets are created. If the required inclination is not reached, water or air filters must be installed at suitable places.

If water is used as a measuring medium, the unit must be protected against frost.

The pressure lines must be kept as short as possible and installed without any tight bends to avoid delays.

Pulsating pressure on the system side can lead to wear and functional problems. To safeguard this, we recommend installing absorption elements in the pressure line.

The process connections are marked with (+) and (-) symbols on the device. The pressure lines must be mounted according to these symbols.

1. **Differential pressure measurement**
   ⊕ Higher pressure
   ⊖ lower pressure
2. **Pressure measurement**
   ⊕ Pressure
   ⊖ open

3.2.1 Cutting ring screw connection

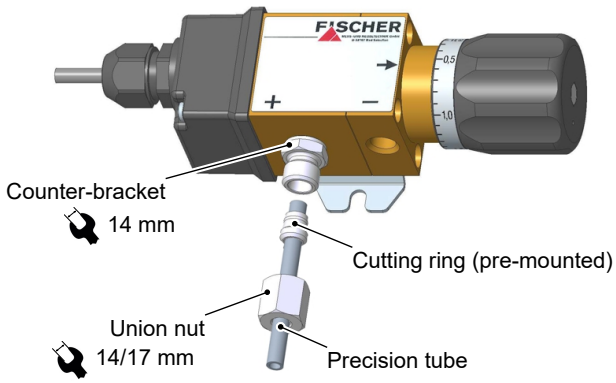

Fig. 4: Process connection

⚠ CAUTION

Maximum tightening torque

The maximum torque for the G⅛ inch inner thread is 5 Nm. The cutting ring screw connections may only be mounted with counter brackets.

Preparation

- Assembly is only possible with tubes that are cut off at right angles. The usual tolerances for minimum tube length, angle and chamber apply.
- Pre-mount the cutting ring.
- Use a lubricant with stainless steel.

Assembly at the assembly site

- Place the pre-mounted tube end with the cutting ring and union nut into the tube screw connection.
- Apply counter-pressure on the tube screw connection with a wrench.
- Use a wrench to tighten the union nut approx. 1/4 to 1/3 turns until a noticeable increase in force is felt.

3.3 Electrical connections

- By authorized and qualified specialized personnel only.
- When connecting the unit, the national and international electro-technical regulations must be observed.
- Disconnect the system from the mains, before electrically connecting the device.
- Install the consumer-adapted fuses.
- Do not connect the connector if strained.

Cable screw connection without cables

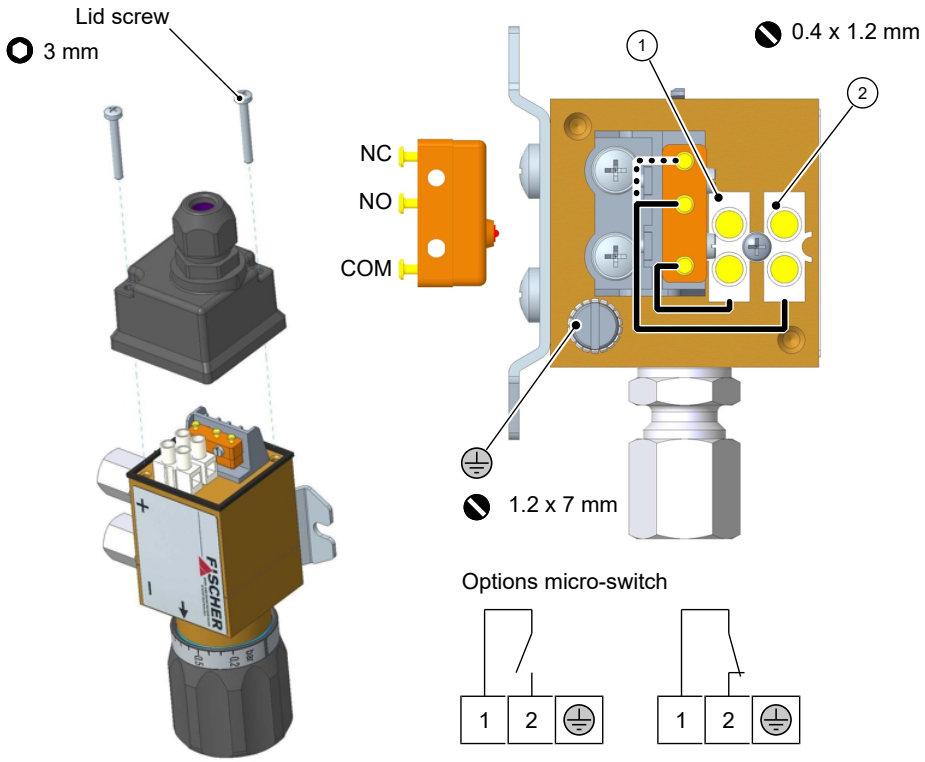

Fig. 5: Electrical connections

With permanently wired numbered cables

Optionally, a numbered cable (see order code) is permanently wired. The cable numbers correspond to the numbers of the terminals.

4 Start-up

4.1 General

A prerequisite for commissioning is correct installation of all electrical supply lines and the differential pressure lines. All connections are arranged so that there are no mechanical forces acting on the device.

⚠ CAUTION

Leak test

The differential pressure lines need to be checked for leaks before commissioning.

In the case of fluid measuring media, the differential pressure lines must be vented because different fluid columns in the lines will distort the measurements.

If water is used as a measuring medium, the unit must be protected against frost.

4.2 Switching point setting

The required switch point is set by turning the setting knob. The switch point marking on the type plate shows the set value on the scale of the setting knob.

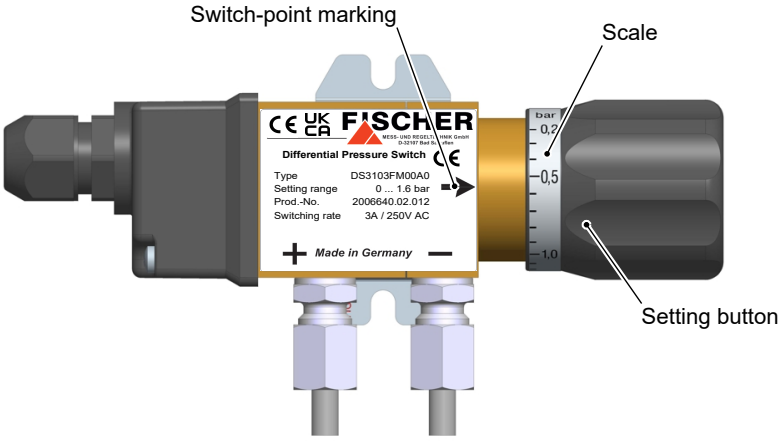

Fig. 6: Switching point setting

5 Servicing

5.1 Maintenance

The instrument is maintenance-free. We recommend the following regular inspection to guarantee reliable operation and a long service life:

- Check the function in combination with downstream components.
- Check the leak-tightness of the pressure connection lines.
- Check the electrical connections.

The exact test cycles need to be adapted to the operating and environmental conditions. In combination with other devices, the operating instructions for the other devices also need to be observed.

5.2 Transport

The measuring device must be protected against impacts. It should be transported in the original packaging or a suitable transport container.

5.3 Service

All defective or faulty devices should be sent directly to our repair department. Please coordinate all shipments with our sales department.

⚠ WARNING

Process media residues

Process media residues in and on dismantled devices can be a hazard to people, animals and the environment. Take adequate preventive measures. If required, the devices must be cleaned thoroughly.

Return the device in the original packaging or a suitable transport container.

5.4 Disposal

Please help to protect the environment by always disposing of the work pieces and packaging materials in compliance with the valid national waste and recycling guidelines or reuse them.

6 Technical data

6.1 General

Reference conditions (acc. to IEC 61298-1)		
Temperature	+15 to +25 °C	
Relative humidity	45 … 75 %	
Air pressure	86 to 106 kPa	860 to 1060 mbar
Installation position	User-defined	

6.2 Input variables

Measuring range	Switching range		Nominal pressure	Bursting pressure
	10 … 100%	*SI unit*		
0 to 400 mbar	40 to 400 mbar	4 to 40 kPa	PN16	64 bar
0 to 0.6 bar	0.06 to 0.6 bar	6 to 60 kPa		
0 to 1 bar	0.10 to 1.0 bar	10 to 100 kPa		
0 to 1.6 bar	0.16 to 1.6 bar	16 to 160 kPa		
0 to 2.5 bar	0.25 to 2.5 bar	25 to 250 kPa		
0 to 4 bar	0.40 to 4.0 bar	40 to 400 kPa		
0 to 6 bar	0.60 to 6.0 bar	60 to 600 kPa		

6.3 Output parameters

Micro-switch	AC	DC
Max. switching voltage	250 V	30 V
Max. switching current	3 A	0.4 A
Min. switching current	0.1A	0.1A
Max. switching output	250 VA	10 W
Mech. life span	10^6 switching cycles	

6.4 Measuring accuracy

Switch point switching range	10 … 100 % of the measuring range
Switch point accuracy	3% of the switching range
Hysteresis	5% of the switching range

6.5 Electrical connection

Hard-wired, silicone and halogen-free number cable

Core number	2 + PE
Conductor nominal cross-section	0.75 mm^2
AWG	19
Outer diameter	7.1 mm

Cable screw connection without cables

Internal connection terminal	2
Earthing	Connection screw for M4 ring cable lug
Conductor nominal cross-section	1 … 2.5 mm^2
Cable screw connection	M16x1.5
Terminal range	5.0 … 10 mm

6.6 Operating conditions

Ambient temperature range	-10 to +70 °C
Storage temperature range	-10 to +80 °C
Medium temperature range (for non-freezing media)	-10 to +80 °C
Low-Voltage Directive	EN 61010-1:2010 +A1:2019+A1:2019/ AC2019
RoHS	EN IEC 63000:2018
Protection class	IP 65 acc. to EN 60529
Materials of the parts that come into contact with the surroundings	
Lid, setting button	POM
Pressure chamber	CW614N
Cable screw connection	Polyamide
Connection cable	PVC halogen-free, flame-retardant
Mounting foot	Galvanised steel and passivated
Materials of the parts that come into contact with the measuring medium	
Pressure chamber	CW614N
O-rings and membrane	Stainless steel 1.431 NBR or FKM (acc. to order key)
Adjustment spindle, membrane plate	CW614N
Switch fields	1.4310
Other parts	CW614N, PTFE

6.7 Construction design

All dimensions in mm unless otherwise stated

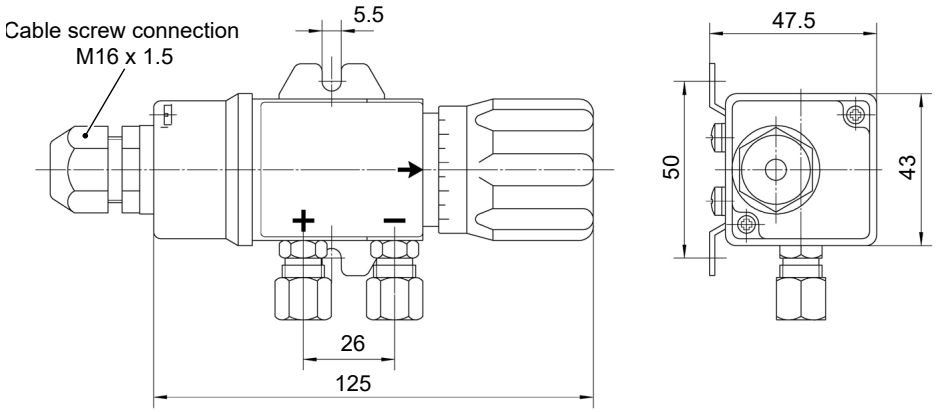

Fig. 7: Dimension drawing

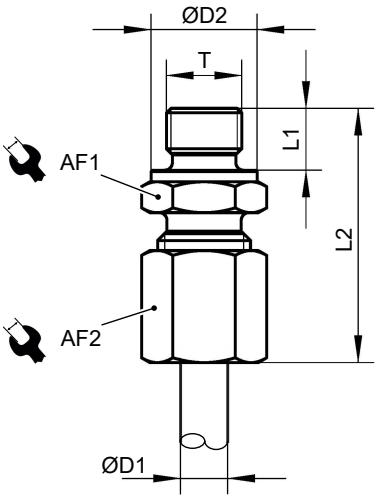

Fig. 8: Cutting ring screw connection

D	ØD1	ØD2	L1	L2	A/F 1	A/F 2
G⅛	6 mm	14 mm	8 mm	23.5 mm	14 mm	14 mm
G⅛	8 mm	14 mm	8 mm	24.5 mm	14 mm	17 mm

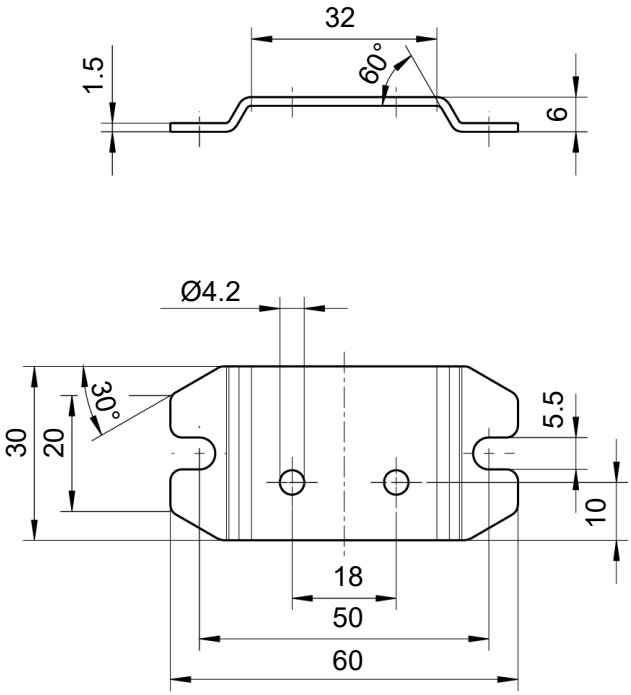

Fig. 9: Mounting foot

7 Order codes

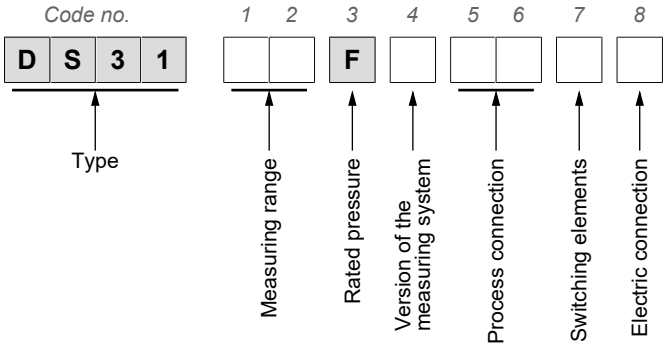

[1.2]	Measuring range	Switching range
83	0 to 400 mbar	40 to 400 mbar
01	0 to 0.6 bar	0.06 to 0.6 bar
02	0 to 1 bar	0.10 to 1.0 bar
03	0 to 1.6 bar	0.16 to 1.6 bar
04	0 to 2.5 bar	0.25 to 2.5 bar
05	0 to 4 bar	0.40 to 4.0 bar
06	0 to 6 bar	0.60 to 6.0 bar

[3]	Nominal pressure
F	PN16

[4]	Measuring system	
M	Pressure chamber: brass	Seals: NBR
N	Pressure chamber: brass	Seals: Viton

[5.6]	Process connection	
00	Inner thread G⅛	
20	Cutting ring connection in brass for 6 mm pipe	Material steel
21	Cutting ring connection in brass for 8 mm pipe	Material steel
28	Cutting ring connection in brass for 6 mm pipe	Material: brass
29	Cutting ring connection in brass for 8 mm pipe	Material: brass

[7]	Switching Elements	
A	1 adjustable micro-switch	Function: NO contact
B	1 adjustable micro-switch	Function: NC contact

[8]	Electrical connection
0	M16 Cable screw connection without cables
1	1.0 m long number cable, hard-wired
2	2.5 m long number cable, hard-wired
5	5.0 m long number cable, hard-wired

8 Attachment

FISCHER MESS- UND REGELTECHNIK

(Translation) CE

EU Declaration of Conformity

For the product described as follows

Product designation **Differential pressure switch**

Type designation **DS31**

it is hereby declared that it corresponds with the basic requirements specified in the following designated directives:

2014/35/EU	*Low Voltage Directive*
2011/65/EU	*RoHS Directive*
(EU) 2015/863	*Delegated Directive amending Annex II to Directive 2011/65/EU*

The products were tested in compliance with the following standards.

Low Voltage Directive (LVD)

DIN EN 61010-1:2020-03 *EN 61010-1:2010 + A1:2019 + A1:2019/ AC:2019*	*Safety requirements for electrical equipment for measurement, control, and laboratory use - Part 1: General requirements*

RoHS Directive (RoHS 3)

DIN EN IEC 63000:2019-05 *EN IEC 63000:2018*	*Technical documentation for the assessment of electrical and electronic products with respect to the restriction of hazardous substances*

Also they were subjected to the conformity assessment procedure „**Internal production control**".

Sole responsibility for the issue of this declaration of conformity in relation to fulfilment of the fundamental requirements and the production of the technical documents is with the manufacturer.

Manufacturer **FISCHER Mess- und Regeltechnik GmbH**
Bielefelder Str. 37a
32107 Bad Salzuflen, Germany
Tel. +49 (0)5222 974 0

Documentation representative Torsten Malischewski
General Manager R&D

The devices bear the following marking: CE

Bad Salzuflen
25 June 2021

G. Gödde
Managing director

09010374 • CE_EN_DS31 • Rev. ST4-A • 06/21 1 / 1

Fig. 10: CE_DE_DS31

Notes

Notes

FISCHER Mess- und Regeltechnik GmbH
Bielefelder Str. 37a
D-32107 Bad Salzuflen

Tel. +49 5222 974-0
Fax +49 5222 7170
www.fischermesstechnik.de
info@fischermesstechnik.de

Technische Änderungen vorbehalten. Subject to technical changes. Sous réserve de modifications techniques.